Alfa Laval

수　신 :　삼 성 중 공 업㈜ / 완성종합설계(기술지원)

참　조 :　유 영 기 대리님

호　선 :　H-1657

제　목 : :　***FINAL DWG FOR F.W GENERATOR (INCL. INSTRUCTION MANUAL)***

1. 귀사의 일익 번창하심을 기원합니다.

2. 상기호선 관련하여, 요청하신 바와 같이 FINAL DRAWING (INCL.INSTRUCTION MANUAL) 5부 + CD 1장을 송부하오니 업무에 참조하시기 바랍니다.

3. 감사합니다.

한 국 알 파 라 발 (주)

2008년 02월 26일

모 영 환 / 박 용 민 드림

Alfa Laval Korea Ltd.
C.P.O. Box 4285, Seoul 100-642, Korea
www.alfalaval.com

DNV
ISO-9002 REGISTERED FIRM
Det Norske Veritas B.V., NETHERLANDS

FINAL DRAWINGS WITH INSTRUCTION MANUAL FOR FRESH WATER GENERATOR

HULL NO. : HN-1657

Hull No.	HN1657
Ship Name	WEST POLARIS
Ship Type	97,000 Drill Ship
IMO.No.	9372535
Electric format	1 CD
No. of copies	5 copy

CUSTOMER **SAMSUNG HEAVY IND. CO., LTD.**

DATE **080226**

Alfa Laval

FINAL DRAWINGS LIST

CUSTOMER : **SAMSUNG HEAVY INDUSTRIES CO., LTD.**

HULL NO : **H-1657**

FWG Type : **D-PU-2-36-CAS125**

No	Description	Document No.	Remark
1	Instruction manual	-	
2	Order specification	-	
3	General description, Freshwater Generator	985 20424	
4	Technical data, Freshwater Generator	985 20427	
5	Technical data, Pump and Motor	985 20461	
6	Flow chart, incl. options	985 18816	
7	Dimension drawing, Freshwater Generator	985 17332	
8	Frame Extension	985 20267	
9	Nirex standard for holes in flanges	984 70193	
10	Equipment specification	985 17326	
11	Vertical plant positioning	985 17495	
12	Assembly scheme	985 15915	
13	Assembly drawing, Freshwater Pump	985 16684	
14	Outline drawing, Motor for Freshwater Pump	985 16704	
15	Dimension drawing, Control Panel build-on	985 17550	
16	Technical data, Control Panel for Freshwater Generator	985 20435	
17	Dimension drawing, Panel for Two-stage FWG	985 17585	
18	Electric diagram, Panel for Two-stage FWG	985 17604	
19	Feed water treatment - 130 Liter	985 17586	
20	Feed water treatment mounting at right side	985 20131	
21	List of loose supply items	LOOSE	
22	Dimension drawing, Thermometer	985 20577	
23	Steel box for spare part kits	985 17526	
24	Standard spare parts for Freshwater Generator	985 20599	

Dept	Date	Drawn	Checked	Approved
Marine & Diesel	2008-02-26	YMP	YMP	YHM

Instruction Manual
for Freshwater Generator
Type D-PU-2-36-CAS100/125

Serial No.: _____

Shipname/
Hull No.: _____

Customer: _____

Book Number O36A2E05.fm

Alfa Laval reserve the right to make changes at any time without prior notice.

Any comments regarding possible errors and omissions or suggestions for improvement of this publication would be gratefully appreciated.

Copies of this publication can be ordered from your local Alfa Laval company.

Published by: Alfa Laval Desalt A/S
Maskinvej 5
DK-2860 Søborg
(Copenhagen) Denmark

© **Copyright Alfa Laval Desalt.**
This document and its content must not be copied, reproduced, transmitted or disclosed to any third party without consent of Alfa Laval Desalt.

Table of Contents

Safety Instructions and Warnings

1.0.0 Safety Instructions and Warnings . . . . . page 5

System Description

1.0.0 Working Principle . . . . . page 7
1.1.0 Freshwater Quality . . . . . page 8
1.2.0 Main Components. . . . . page 8
1.3.0 Alternative Steam . . . . . page 9

Operating Instructions

1.0.0 Starting and Stopping Procedure . . . . . page 11
1.1.0 Starting-up the Plant with Jacket Cooling Water Heating. . . . . page 11
1.1.1 Evaporation . . . . . page 11
1.1.2 Condensation . . . . . page 12
1.2.0 Adjustment of Jacket Water Flow . . . . . page 12
1.3.0 Adjustment of Sea Cooling Water. . . . . page 13
1.4.0 Stopping the Plant . . . . . page 13
2.0.0 Before Starting Up the Plant with Steam Injection Equipment . . . . . page 14
2.1.0 Starting Up the Plant with Steam Injection Equipment (AS) . . . . . page 15
2.1.1 Evaporation . . . . . page 15
2.1.2 Condensation . . . . . page 16
2.2.0 Adjustment of the Freshwater Production. . . . . page 16
2.3.0 Stopping the Plant Working with Steam Injection Heating . . . . . page 16
2.4.0 Changing from Steam Injection Heating to Jacket Cooling Water . . . . . page 17
2.5.0 Long Term Standstill. . . . . page 18

Maintenance

1.0.0 Why you need to perform regular maintenance duties. . . . . page 19
1.1.0 Overhaul Intervals. . . . . page 19
1.2.0 Maintenance of Separator Vessel. . . . . page 20
1.3.0 Maintenance of Evaporator Section . . . . . page 21
1.4.0 Maintenance of Condenser Section . . . . . page 22
1.5.0 Renewal of Plate Heat Exchanger Gaskets . . . . . page 23
1.5.1 Removal of Old Gaskets . . . . . page 23
1.5.2 Cleaning . . . . . page 24
1.5.3 Preparation of new Gaskets . . . . . page 24
1.5.4 Fitting new Gaskets . . . . . page 24

Pressure Test

1.0.0 Pressure Testing Separator . . . . . page 27

Chemical Dosing of Scale Control Chemicals

1.0.0 Prevention of Scaling . . . . . page 29
1.1.0 Feed Water Ratio. . . . . page 29
1.2.0 Chemical Dosage . . . . . page 29
1.2.1 Scale Inhibitor Dosage Equipment for Feed Water . . . . . page 30
1.2.2 Safety Precautions with the use of Chemicals . . . . . page 31

Trouble-Shooting

1.0.0 Test Sheet . . . . . page 33
1.1.0 Trouble Shooting Table . . . . . page 33

Maintenance of Freshwater Pump

1.0.0 Maintenance of Freshwater Pump Types PVVF 1525-1532-2040 . . . . . page 37
1.1.0 Overhaul of the Pump . . . . . page 37
1.1.1 Clearance . . . . . page 38
1.1.2 Dismantling Pump Shaft . . . . . page 38

Maintenance of Ejector Pump

1.0.0 Maintenance of Ejector Pump . . . . . page 41
1.1.0 Overhaul of the Pump . . . . . page 41
1.1.1 Clearance . . . . . page 42
1.1.2 Dismantling Pump Shaft . . . . . page 44

Salinometer

1.0.0 Salinometer Type DS-20 . . . . . page 45
1.1.0 Technical Specification . . . . . page 45
1.2.0 Installation (for DS-20). . . . . page 45
1.3.0 Instructions for use . . . . . page 46
1.3.1 Testing the Instrument . . . . . page 46
1.3.2 Adjustment of Alarm Level . . . . . page 46
1.3.3 Maintenance . . . . . page 47

Spare Parts

1.0.0 Ordering Spare Parts. . . . . page 49
1.1.0 Alfa Laval Service . . . . . page 49

Index

Safety Instructions and Warnings

Should you need further clarification regarding this manual, do not hesitate to contact your local Alfa Laval representative - or call Alfa Laval Desalt directly.

Telephone +45 (for Denmark) 39 53 60 00

Telefax +45 (for Denmark) 39 53 65 66

1.0.0 Safety Instructions and Warnings

The following symbols in this manual point out safety precautions. It means your attention is needed and your safety is involved.

WARNING

This symbol is used to indicate the presence of a hazard which can or will cause severe personal injury, if the warning is ignored.

CAUTION

Certain passages of the text will be marked with a caution mark. This mark indicates the presence of hazard which will or can cause property damage if the instructions are not observed.

NOTE

This type of instruction indicates a situation which, if not avoided, could result in damage to the equipment.

It is the owner's and operator's responsibility to see that any person involved with the use or operation of this equipment follow all safety instructions.

Read all safety instructions carefully and insist that they will be followed by those working with you and for you. Not following the instructions may cause severe personal injury or damage the equipment beyond repair.

Do not allow this equipment to be used if it is faulty or the operator does not understand the proper use.

WARNING

The freshwater generator is not to be operated in polluted water or within 20 miles from the coast

Freshwater must not be produced from polluted water, as the produced water can be unsuitable for human consumption.

If manuals are translated to local language the unit comply with the EEC Machinery Directive and EN 292-1/2 standards. For EEC land installations manuals MUST be available in local language before installing and operating the unit.

The unit also comply with EN 50081-2 and EN 50082-2 “Industry” with regards to the EMC directive from EEC.

WARNING

Noise hazards
- Use ear protection in noisy environments.

Crush hazards
- Use correct lifting tools.
- Do not work under hanging load.

Burn hazard
- Wear gloves to avoid burns by hot surfaces.

Cut hazards
- Wear gloves to avoid cuts by sharp edges when handling machined parts.
- Wear helmet to avoid cuts by sharp edges during maintenance of the equipment.

NOTE

- Max. ambient temperature for the equipment is 50°C (122°F).
- Min. ambient temperature for the equipment is 0°C (32°F).

System Description

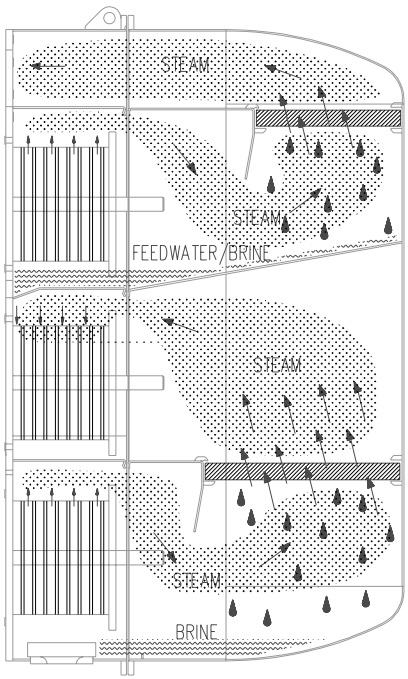

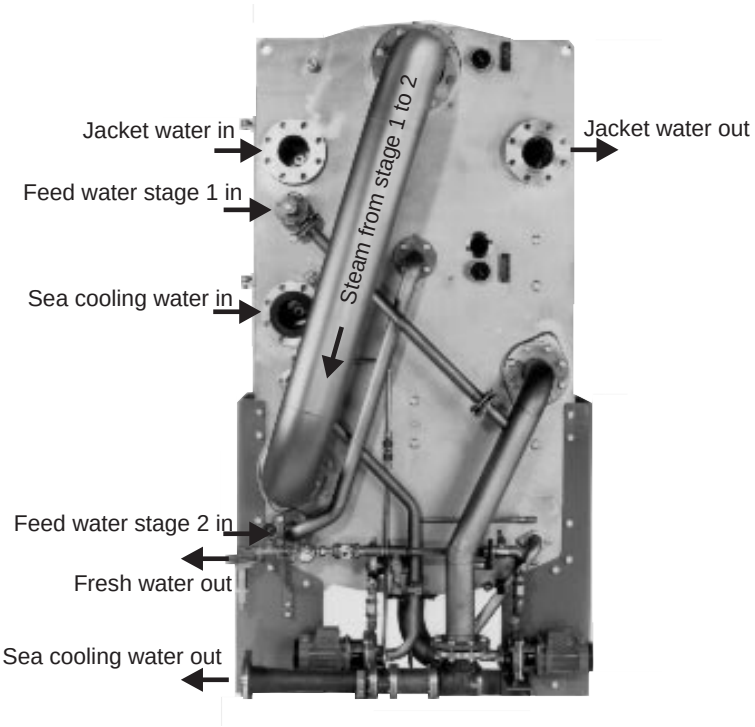

1.0.0 Working Principle

The combined brine/air ejector driven by the ejector pump creates a vacuum in the system in order to lower the evaporation temperature of the feedwater.

The feedwater is introduced into the evaporator section stage 1 through an orifice, and is distributed into every second plate channel (evaporation channels).

The hot water is distributed into the remaining channels, thus transferring its heat to the feedwater in the evaporation channels.

Having reached boiling temperature - which is lower than at atmospheric pressure the feed water undergoes a partial evaporation, and the mixture of generated vapour and brine enters the separator vessel, where the brine is separated from the vapour and is introduced into every second channels of the evaporator stage 2 as feed water.

The vacuum steam generated in the first stage passes via a demister into the remaining channels in stage 2 of the evaporator section.

Transferring its heat contents to the feedwater of the second stage, the vacuum steam condenses and is extracted by one of the freshwater extraction- and transfer pumps.

The brine from the second stage is extracted by the combined brine/air ejector.

The vacuum steam generated in the second stage passes via a demister into every second plate channel of the condenser section of the second stage.

The seawater supplied by the ejector pump is distributed into the remaining channels, thus absorbing the heat being transferred from the condensing vapour.

The produced freshwater is extracted by the freshwater pump and led to the freshwater tank.

1.1.0 Freshwater Quality

To continuously check the quality of the produced freshwater, a salinometer is provided together with an electrode unit fitted on the freshwater pump delivery side.

If the salinity of the produced freshwater exceeds the chosen maximum value, the dump valve and alarm are activated to automatically dump the produced freshwater to the bilge.

If there are no special requirements from the authorities, the produced freshwater can be used directly as drinking water.

1.2.0 Main Components

The freshwater generator consists of the following components:

1. **Evaporator section**
   The evaporator section consists of a plate heat exchanger and is enclosed in the separator vessel.

2. **Separator vessel**
   The separator separates the brine from the vapour.

3. **Condenser section**
   Just like the evaporator section the condenser section consists of a plate heat exchanger enclosed in the separator vessel.

4. **Combined brine/air ejector**
   The ejector extracts brine and incondensable gases from the separator vessel.

5. **Ejector pump**
   The ejector pump is a single-stage centrifugal pump. This pump supplies the condenser with sea water and the brine/air ejector with jet water as well as feed water for evaporation.

6. **Freshwater pump**
   The freshwater pump is a single-stage centrifugal pump. The freshwater pump extracts the produced freshwater from the condenser, and pumps the water to the freshwater tank.

7. **Salinometer**
   The salinometer continuously checks the salinity of the produced water. The alarm set point is adjustable.

8. **Control panel**
   Normally, the control panel is delivered by Alfa Laval Desalt A/S. It contains motor starters, running lights, salinometer, contacts for remote alarm and is prepared for start/stop.

1.3.0 Alternative Steam

1. **Steam injector**
   Instead of jacket cooling water heating, saturated live steam can alternatively be used as heating medium for the freshwater generator. In the steam injector the steam transfers partly heat, partly kinetic energy to the circulating water.

   The condensate produced in this circuit is transferred to the condensate well through G3.

2. **Safety valve**
   If the pressure after the steam injector exceeds 1 bar g the safety valve will open to secure the vessel.

3. **Steam quality**
   The steam supplied to the steam injector must be saturated steam.

WARNING

DO NOT operate the plant in polluted water.

Freshwater must not be produced from polluted water, as the produced water will be unsuitable for human consumption.

1.0.0 Starting and Stopping Procedure

CAUTION

Before starting up please observe instructions for feedwater treatment, see "Chemical dosing of scale control chemicals".

Please refer to PI-diagram (see "FWG Order Specification").

1.1.0 Starting-up the Plant with Jacket Cooling Water Heating

1. Open valves on the suction and discharge side of the ejector pump PU-SC-01.
2. Open overboard valve for combined brine/air ejector.
3. Close **air screw VA-E1-01** on the separator.
4. Start **ejector pump PU-SC-01** to create a vacuum of min. 90%.

   Pressure at combined brine/air ejector inlet minimum 300 kPa (3.0 kp/cm²).

   Back pressure at combined brine/air ejector outlet maximum 60 kPa (0.6 kp/cm²).

1.1.1 Evaporation

When there is a minimum of 90% vacuum (after maximum 10 minutes),

CAUTION

To secure that the boiler water and the jacket water do not mix the two butterfly **valves** in the steam injector circuit must be closed.

5. Close the two butterfly **valves** in the steam injector circuit.

6. Open valve for feedwater treatment, if any.

7. Open hot water inlet and outlet valves.

8. Start hot water supply to distiller by adjusting bypass valve step-wise 10°C, until the desired jacket water temperature is reached.

   The boiling temperature now rises, while the obtained vacuum drops to approx. 85%.

   This indicates that evaporation has started.

1.1.2 Condensation

After approx. 3 minutes the boiling temperature will drop again, and normal vacuum is reestablished.

9. Open valve to freshwater tank.

10. Switch on salinometer.

11. Start **freshwater pump PU-FR-01/PU-FR-02**.

NOTE

The freshwater pump pressure must be between 120 and 160 kPa (1.2 - 1.6 kp/cm²).

1.2.0 Adjustment of Jacket Water Flow

Please refer to “FWG Order Specification” for specified hot water flow.

In order to obtain the specified flow of hot water, it is necessary to adjust the bypass

valve until desired flow is achieved.

The flow can be calculated as follows:

$$M_{JW} = \frac{K_{JW} \times \text{cap.m}^3/24\text{h}}{\Delta t_{JW}} = \text{m}^3/\text{h}$$

Where:

M_{JW} = Flow of hot water in one hour.

K_{JW} = Constant=26.67 for 1-stage freshwater generator
= Constant =15.52 for 2-stage freshwater generator

Δt = Difference in temperature of hot water in and out.

Cap.m³/24h = Freshwater production in 24 hours, i.e. production in 5 min.times 288.

Example: cap. m³/24h = 20m³
T_{SW} = 32°C

Δt_{JW} = 6°C

1-stage freshwater generator

$$M_{JW} = \frac{26.67 \times 20}{6} = 89 \text{ m}^3/\text{h}$$

1.3.0 Adjustment of Sea Cooling Water

The sea cooling water flow is correct, when the pressure at the inlet of the combined brine/air ejector is between 300 and 400 kPa (3.0 - 4.0 kp/cm².).

1.4.0 Stopping the Plant

1. Stop hot water supply to distiller.
2. Close valve for feedwater treatment, if any.
3. Stop **freshwater pump PU-FR-01/PU-FR-02.**
4. Switch off salinometer.
5. Stop **ejector pump PU-SC-01.**

6. Open **air screw VA-E1-01.**
7. Close inlet and outlet valves for ejector pump.
8. Close overboard valve for combined brine/air ejector.
9. Close the valve to fresh water tank.

CAUTION

All valves must be shut, while the generator is out of operation. Except air screw.

2.0.0 Before Starting Up the Plant with Steam Injection Equipment

WARNING

The steam arrangement must be filled with fresh water from hydrophone system, before steam is supplied to the system.

When changing from jacket water heating to steam injection heating

1. Close in- and outlet valves for jacket cooling water system (yard supply)
2. Empty the jacket cooling water by G4 to the bilge
3. Open the plug at G2.
4. When empty: close the outlet G4

To fill up the steam injection system with clean fresh water or steam condensate.

5. Open the two butterfly **valves** in the steam injector circuit
6. Fit a water hose into **G2**.
7. Fill up the system, with boiler feed water or clean fresh water until water escape from ball valve at the steam condensate outlet G3.
8. Then close this valve.
9. Dismantle the water hose.

10. Close the G2 with a plug.

WARNING

No valve at all must be fitted on the pipe from the safety valve (G16) as this pipe must be open to the atmospheric pressure.

2.1.0 Starting Up the Plant with Steam Injection Equipment (AS)

1. Open valves on the suction and discharge side of the combined **ejector/cooling water pump PU-SC-01.**

2. Open overboard valve for **combined brine/air ejector EW-ES-01.**

3. Close **air screw VA-E1-01** on the separator.

4. Start **combined ejector/cooling water pump PU-SC-01** to create a vacuum of min. 90%.

   Pressure at combined brine/air ejector inlet minimum 300 kPa (3.0 kp/cm²).

   Back pressure at combined brine/air ejector outlet maximum 60 kPa (0.6 kp/cm²).

2.1.1 Evaporation

5. Open the two butterfly valves in the steam injector circuit.

6. Open valve for feedwater treatment, if any.

7. Open the steam inlet valve (yard supply) slowly.

8. Wait a few minutes until the equipment will be noiseless.

9. Continue the supply of steam until the desired inlet pressure is reached. Steam pressure must be in accordance with pressure stated in “Technical specification”.

WARNING

Max. back pressure in condensate discharge line is 80 kPa (0.8 kp/cm²).

2.1.2 Condensation

10. Open valve to freshwater tank.

11. Switch on salinometer.

12. Start **freshwater extraction/transfer pump PU-FR-01/PU-FR-02.**

13. Readjust the steam supply to reach the freshwater production.

> **NOTE**
>
> The freshwater pump pressure must be between 120 and 160 kPa (1.2 - 1.6 kp/cm²).

2.2.0 Adjustment of the Freshwater Production

The freshwater production can be regulated by adjustment of the quantity of steam supplied to the steam injector.

The steam inlet pressure corresponding to the production of fresh water in question can be regulated either by means of a manually operated regulating valve (yard supply) or by an automatic reduction valve (yard supply).

Steam pressure must be in accordance with pressure stated in “FWG Order Specification”.

>
>
> **WARNING**
>
> Do not open steam inlet valve for the steam injector before the ejector pump PU-SC-01 has been started and serves feed water to the evaporator.

2.3.0 Stopping the Plant Working with Steam Injection Heating

1. Close steam inlet valve (yard supply).

2. Close valve for feedwater treatment, if any

3. Stop **freshwater pump PU-FR-01/PU-FR-02.**
4. Switch off salinometer.
5. Stop **ejector pump PU-SC-01.**
6. Open **air screw VA-E1-01.**
7. Close inlet and outlet valves for ejector pump.
8. Close overboard valve for combined brine/air ejector.
9. Close the valve to fresh water tank.

CAUTION

When stopping the plant always check that the steam inlet valve is completely closed.

This to avoid high temperature in the evaporator, as this might cause:

- Scale formation on the inside of the heat exchanger plates.
- Damage the gaskets in the heat exchanger.

2.4.0 Changing from Steam Injection Heating to Jacket Cooling Water

1. Close the valve for steam supply (yard supply).
2. Close the two butterfly valves for **steam injection equipment.**
3. Open the ball valve at the steam condensate outlet G3.
4. Empty the boiler water by G4 to the bilge.
5. When empty: Close the outlet G4.
6. Close the ball valve mentioned above.
7. Open the valves for in- and outlet jacket cooling water to the evaporator (yard supply).
8. Start hot water supply to distiller by adjusting bypass valve step-wise until the desired jacket water temperature is reached.

2.5.0 Long Term Standstill

If the distiller is out of operation for periods longer than 14 days, please observe “Maintenance of separator vessel”.

Maintenance

1.0.0 Why you need to perform regular maintenance duties

Regular maintenance of the plant will improve performance and availability.

The maintenance schedule on the following pages will tell you how often service should be performed on the main components.

As the actual operating conditions of the plant are of major influence on the life time, the overhaul dates are not obligatory but only recommended intervals.

When the plant has been in operation for a longer period of time and experience has been established as to the actual performance, it will be possible to adapt the maintenance schedule.

For service on minor components please refer to component instructions.

1.1.0 Overhaul Intervals

Component	**Operating Hours**	**Action**
Evaporator section	As required	Clean in inhibited acid bath
Condenser section	As required	Clean with pure freshwater and brush
Combined ejector/cooling water pump with motor	8000 h	Measure seal ring and impeller. Examine mechanical shaft seal, cooling water pipe passage. Megger-test electric motor. Clean pump thoroughly before reassembly.
Freshwater extraction pump with motor	8000 h	See above
Combined air/brine ejector	8000 h	Measure nozzles and diffuser and compare to measurements in technical specification.
MV-valves	4000 h	Disassembly and inspect for damage.
Demister	8000 h	Clean in inhibited acid bath

Component	Operating Hours	Action
Manometers	8000 h	Adjust with control manometer
Salinometer	See separate instructions	See separate instructions

1.2.0 Maintenance of Separator Vessel

The separator vessels and the pressure plates for the heat exchanger sections (evaporator and condenser) are made of stainless steel with a special chemical treatment. This treatment will reestablish normal surface oxidation after work- up at the factory. The preparation is a natural protection of the stainless steel.

CAUTION

To preserve this natural protection DO NOT scrape or scratch the inside surface of the separator vessels.

Further, there are isolating layers on the separator inside walls, where the heat exchanger sections are mounted.

Whenever the sections are dismantled, these isolating layers must be checked for defects. Repair any defects according to the maintenance guide for glass flake coating.

Whenever the separator vessel is opened,

- check that the anodes are functioning

If the anodes are not functioning and/or worn, replace them.

NOTE

If the unit is stopped for a longer period than 14 days.

- Open separator covers and clean unit inside with freshwater.
- Let the unit dry out completely, before closing covers.

1.3.0 Maintenance of Evaporator Section

Clean evaporator as follows:

1. Remove bolts in front cover, and open.
2. Loosen the 6 nuts in plate stack gradually, so that no nut is carrying the entire load alone
3. Remove plate stack.

> **NOTE**
>
> If some of the gaskets come loose on removing plate stack, please see section 1.5.2

4. Submerge plates completely in a hot, inhibited acid bath at maximum 50ºC. For further instructions see “Chemical dosing of scale control chemicals”.

> **WARNING**
>
> Always follow carefully the suppliers instructions when using inhibited acids.
>
> Remember to neutralize according to suppliers instructions.

5. Examine plates and gaskets for possible damage, and remove damaged plates and/or replace damaged gaskets.
6. If a defective plate is found, remove the plate together with one of the adjacent plates.

> **NOTE**
>
> The assembly measurements must be reduced with 5.4 mm per plate, if plates are removed from plate stack.

CAUTION

The ES and EE plate cannot be removed but must always be replaced, with a corresponding plate.

7. Reassemble evaporator section in accordance with assembly scheme.
8. Tighten plate stack to measurements stated in technical specification.
9. Pressure test evaporator section before closing front cover.

   The evaporator section is pressure tested by letting hot water circulate through the section with bypass valve for hot water in normal running position.

10. When the evaporator section is found to be tight, close front cover and tighten bolts.
11. Retighten, when vacuum has been reestablished.

1.4.0 Maintenance of Condenser Section

Clean condenser as follows:

1. Remove bolts in front cover, and open.
2. Loosen the 6 nuts in plate stack gradually, so that no nut is carrying the entire load alone.
3. Remove plate stack.

NOTE

If some of the gaskets come loose on removing plate stack, please see section 1.5.2

4. Scrub plates with a soft brush and plain hot water at maximum 50°C.
5. Examine plates and gaskets for possible damage, and remove damaged plates and/or replace damaged gaskets.
6. If a defective plate is found, remove the plate and one of the adjacent plates.

NOTE

The assembly measurements must be reduced with 5.4 mm per plate, if plates are removed from plate stack.

CAUTION

The ES and EE plate cannot be removed, but must always be replaced, with a corresponding plate.

7. Reassemble condenser section in accordance with assembly scheme.

8. Tighten plate stack to measurements stated in technical specification.

9. Pressure test condenser section before closing front cover.

   The condenser section is pressure tested by letting sea water from the combined cooling water/ejector pump circulate through the section.

CAUTION

Before starting the combined ejector/cooling water pump, the feed water must be sealed off.

10. When the condenser section is found to be tight, close front cover and tighten bolts.

11. Retighten, when vacuum has been reestablished.

1.5.0 Renewal of Plate Heat Exchanger Gaskets

1.5.1 Removal of Old Gaskets

Pull the old gaskets out of groove.

If the gasket cannot come off directly, heat the back of the gasket groove with a hot-air blower or butane gas burner.

Pay attention not to overheat the plates.

You will obtain a suitable temperature, if the flame is held 10 to 15 cm behind the plate.

WARNING

DO NOT use ***acetylene gas***

1.5.2 Cleaning

Charred or loose glue and rubber remains must be removed, e.g. using a rotating stainless steel brush. The width should be adapted (Ø40-50 mm, width 8-10 mm). Thin layers of glue which are difficult to remove, may remain.

Clean the gasket groove with a clean cloth, dipped in a solvent (acetone, methyl ethyl ketone, trichlorethylene etc.).

WARNING

Be careful when handling these solvents, as they may be hazardous to your health. Observe suppliers' instructions.

Gaskets, that have loosened, can be glued on. Clean gasket groove carefully with a sharp tool. Then clean the loose part of the gasket with emery cloth or sandpaper. Finally clean groove and gasket with a solvent, and glue.

1.5.3 Preparation of new Gaskets

Dry new gaskets with a clean cloth that has been slightly moistened with a solvent.

1.5.4 Fitting new Gaskets

1. Apply a thin layer of glue to both gasket and groove.
2. Let the glue dry for 10-15 minutes.
3. Fit new gasket into groove.

   Gaskets may sometimes be slightly short or long.

Short gaskets should be stretched before being fitted into the groove.

Long gaskets should be fitted into the grooves at the plate ends first and then gradually be pushed into the groove towards the middle.

If necessary, tape gasket into groove.

Pressure Test

1.0.0 Pressure Testing Separator

If there are leaks in the system, it will be necessary to carry out a pressure test in order to identify the leak:

1. Close valve on discharge side of combined cooling water/ejector pump.
2. Close discharge valve on overboard line from combined brine/air ejector.
3. Close valve on discharge line to freshwater tanks.
4. Open separator vessel in order to vent the vessel, when supplying water for pressure test.
5. Supply water (sea or freshwater) at the socket for the connection of feed water treatment.

CAUTION

Maximum pressure on the separator vessel is 150 kPa (1.5 kp/cm^2) (21 PSI).

Chemical Dosing of Scale Control Chemicals

1.0.0 Prevention of Scaling

During the evaporation of sea water there is always a risk of scaling on the heating surfaces. This will lead to a reduction of the K-values of the heating surface and decreasing freshwater production and reduction of plant efficiency.

In order to effectively prevent scaling the operators must be aware of the factors influencing the scale formation.

1.1.0 Feed Water Ratio

The feedwater ratio is an extremely important factor. It is defined by the relationship between the feedwater amount fed into the plant and the produced amount of freshwater.

If the feedwater ratio is reduced, the concentration will rise in the plant subsequently resulting in scale formations.

Two things may shift the feedwater ratio: first of all direct adjustment of the feedwater system, and secondly exceeding the maximum freshwater production laid out for the plant. The operators must observe the following rules at all times.

CAUTION

DO NOT adjust feedwater system. Feedwater pressure min. 3.0 max. 4.0 bar g.

1.2.0 Chemical Dosage

In order to control scale formations on the heating surfaces and continuously ensure long operation periods without acid cleaning the plant, it is absolutely necessary to dose scale control additives to the feedwater. The operators must follow the instructions for chemical dosing given by the chemical supplier carefully.

CAUTION

If the distiller is operated at boiling temperatures above 45°C without chemicals, frequent cleaning of the evaporator will be necessary.

We recommend that you do not operate the freshwater distiller without recommended chemical dosage at boiling temperatures above 45°C. Even at lower temperatures it can be recommended.

1.2.1 Scale Inhibitor Dosage Equipment for Feed Water

Please refer to drawing, see “FWG Order Specification”.

- When adding chemicals mix thoroughly to ensure a homogenous blend of chemicals and water.

Use a fully soluble scale inhibitor, e.g. on polymer basis. The following products can be recommended:

NALFLEET Evaporator treatment 9-913

AMEROYAL EVAPORATOR TREATMENT

HEXAMETHAPHOSPHATE

1. Mix the required quantity for 24 hours operation in the tank according to maker’s instructions.

2. Adjust flowmeter to cover the maximum freshwater output from the distiller.

3. Flush the dosage system regularly.

1.2.2 Safety Precautions with the use of Chemicals

WARNING

1 USE eye protection and gloves. Avoid direct skin contact, eye contact or contact with clothes.

2 CLEAN empty containers before disposal.

3 If chemicals are spilled on clothes, rinse with water and dispose off clothes.

4 If chemicals are spilled on the floor, rinse with water and suck remaining chemicals off with sand. Clean the spot immediately afterwards.

5 Scale inhibitor is hazardous, if consumed in a concentrated solution. If consumed by mistake.
IMMEDIATELY SEEK MEDICAL ATTENTION.

6 If eyes get in contact with the chemicals, rinse for at least 20 minutes.
IMMEDIATELY SEEK MEDICAL ATTENTION.

Trouble-Shooting

1.0.0 Test Sheet

Before taking any action, please fill in a test sheet to find possible causes of malfunctions.

Test sheets can be found in the back of this binder.

1.1.0 Trouble Shooting Table

Problem	Cause	Action
Drop in production.	Partially blocked feed water orifice and/or sludge deposits on hot water side.	Dismantle evaporator section, and clean evaporator and orifice.
	Sludge on the heat exchanger plates on the sea water side.	Dismantle condenser section, and clean.
	Inlet channel in evaporator/ condenser plate stack blocked, e.g. with rust scales, gasket fragments etc.	Dismantle evaporator/ condenser section, and clean.
	Too low ejector pump pressure.	See instructions for “Low Sea Cooling water/Ejector pump flow / pressure”, below.
	Leakages	Carry out a pressure test at max. 150 kPa (1.5 kp/cm²) (21.8 PSI).a
	Foreign bodies in ejector nozzles.	Inspect nozzles, and clean. Replace nozzles, if damaged.
	Too high back pressure on ejector outlet side. Max 60 kPa (0.6 kp/cm²) (8.7 PSI).	Check overboard pipe and valves for blocking / functionability.
	Non-return valve in air extraction pipe defect.	Replace non-return valve.
	Hot water temperature too high.	Reduce to specified temperature.
	Defective water clock.	Examine water clock. Let the produced water flow through water clock into a 10 l pail, and check production with a stop watch.

Problem	Cause	Action
Low Sea Cooling water/Ejector pump flow / pressure. Minimum pressure 300 kPa (3.0 kp/cm²) (43.5 PSI). At inlet side of ejector.	Too low ejector pump pressure.	Clean, or replace pressure gauge.
	Suction strainer blocked.	Clean suction strainer.
	Valves on suction or pressure pipe defect.	Examine and overhaul defective valves.
	Leakage from suction pipe to pump.	Repair.
	Impeller / seal ring defective.	Check pump maximum clearance See “Maintenance of Ejector Pump”
	Clocked up condenser plate stack.	Dismantle condenser plate stack and clean.
	Pump rotating in wrong direction.	Interchange phases.
Sight glass overflow. Normal back pressure for freshwater pump is 120 - 160 kPa (1.2 - 1.6 kp/cm²) (17.4 - 23.2 PSI). Except for JWP-16-C40 generator type, where the max. back pressure is 80 kPa (0.8 kp/cm²) (11.6 PSI).	Suction pipe leakage.	Check suction pipe especially unions and connections. Repair.
	Mechanical seal in freshwater pump defect.	Replace mechanical seal.
	Impeller / seal ring in freshwater extraction pipe defect.	Check pump maximum clearance See “Maintenance of Freshwater Pump”
	Pump rotating in wrong direction.	Interchange phases.
	Valves to freshwater tank closed.	Check all valves.
	Inlet filter for water clock blocked.	Clean filter.
Salinity too high (more than 2.0 ppm).	Demister not fitted correctly.	Check that demister is fitted against baffle and front cover.
	Front cover gasket defect or not fitted correctly.	Replace front cover gasket.
	Insufficient brine extraction.	See separate instructions for insufficient brine extraction, below.
	Electrode unit defective or dirty.	Examine electrode unit for cracks. Check that it is fitted correctly. Clean, if necessary.

Problem	Cause	Action
	Leakage in condenser section.	Open distiller and pressure test condenser. Max. 600 kPa (6.0 kp/cm²) (87 PSI). If there is a defective plate, remove together with adjacent plate assemble plate stack according to new plate number with reduced assembly measurements. Check plate gaskets and replace, if necessary.
Insufficient brine extraction - brine level in sight glass higher than 20 mm.	Ejector pump pressure too low.	See special instructions for “Low Sea Cooling water/Ejector pump flow / pressure”, above.
	Foreign bodies in ejector nozzles.	Check nozzles, and clean. Replace damaged nozzles.
	Too high back pressure downstream of ejector.	Examine overboard pipe and valves.
	Wrong dimension of feedwater orifice.	Examine orifice dimension - check technical specification.
	Non-return valve in brine suction pipe of ejector defect.	Examine valve and repair, or replace.
Frequent refill of freshwater expansion tank due to loss of hot water.	Leakage in evaporator section.	Open distiller and pressure test condenser. Max. 600 kPa (6.0 kp/cm²) (87 PSI). If there is a defective plate, remove together with adjacent plates assemble plate stack according to new plate number with reduced assembly measurements. Check plate gaskets and replace, if necessary.
Abnormal amperage consumption of ejector pump motor.	Ejector nozzles defective.	Replace nozzles.
	Wrong dimension of feedwater inlet orifice.	Check dimensions on spare parts list, See List of spare part drawings”, and replace if necessary.
	Bearings in motor defective.	Examine with stetoscope, and replace bearings, if defective.
	Contactor defective.	Examine and replace contactor set, if defective.
	Breaking of phases.	Max. 5% difference in amperage between phases.

Maintenance of Freshwater Pump

1.0.0 Maintenance of Freshwater Pump Types PVVF 1525-1532-2040

The following instructions must be carefully observed whenever it becomes necessary to overhaul or repair the freshwater pump.

Please refer to drawing for item references in the text.

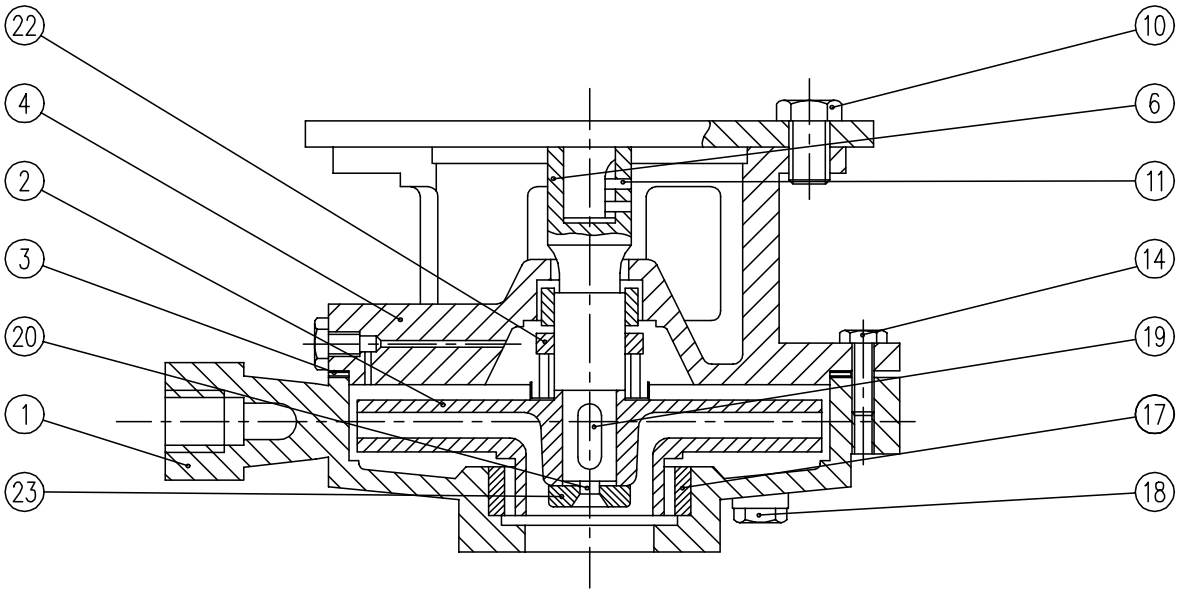

1.1.0 Overhaul of the Pump

1. Remove the **nuts 14** on the **pump casing 1.**
2. Lift motor with **pump cover 4** and **impeller 2** clear of **pump casing 1**.
3. Unscrew **countersunk screw 20** (right hand thread).
4. Remove impeller. Normally, it can be removed without using dismantling tools.
5. Remove **key 19.**
6. Remove the **mechanical shaft seal 22.**
7. Inspect the ceramic ring, the carbon ring and the spring.
8. Replace mechanical shaft seal, if necessary. It is recommended to grease the shaft and seat for the ceramic ring with glycerine in order to make it easier to assemble the mechanical shaft seal. Please also observe separate instructions for mechanical shaft seal delivered together with the seal.

9. Fit carbon ring, spring and spring holder on pump shaft.

10. Inspect impeller and the drilled sealing water channel for clogging, and clean.

11. Remember to replace gasket 3.

12. Reassemble in reverse order.

1.1.1 Clearance

In connection with the inspection be sure to measure the **impeller and wear ring 17** in order to secure that the clearance is no more than 0.5 mm on the diameter.

CAUTION

The **pump shaft 11** must only be dismantled, if pump shaft or electric motor bearing has to be replaced.

In this case carefully observe “Dismantling pump shaft”.

1.1.2 Dismantling Pump Shaft

1. Dismantle the pump as described above.

2. Unscrew **pointed screws 11.**

3. Carefully insert two screw drivers behind the pump shaft, and loosen it.

   If the pump shaft does not come loose, use the special dismantling tools shown below.

   The tool is not Alfa Laval Desalt supply.

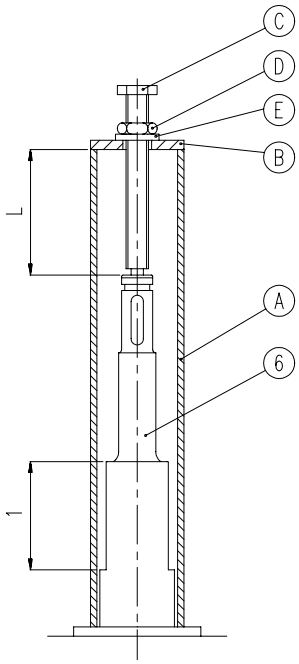

The tool consists of a pipe (A), a disc (B) with hole for the screw (C) and a nut (D), washer (E).

Please note that the length L must be longer than the length l.

Place pipe around the shaft. Fasten the screw with nut and washer into the threaded hole (M12) on the shaft end.

Loosen shaft by tightening the nut while holding on to the screw.

CAUTION

DO NOT grind the motor shaft.

4. Mount the new pump shaft on the motor shaft.

5. Make sure that the pump shaft fits the motor shaft without any obstructions, before final shaft fitting as follows:

   - Tap onto the end of the pump shaft slightly with a RUBBER hammer.

6. Tighten **pointed screws 11** as follows:

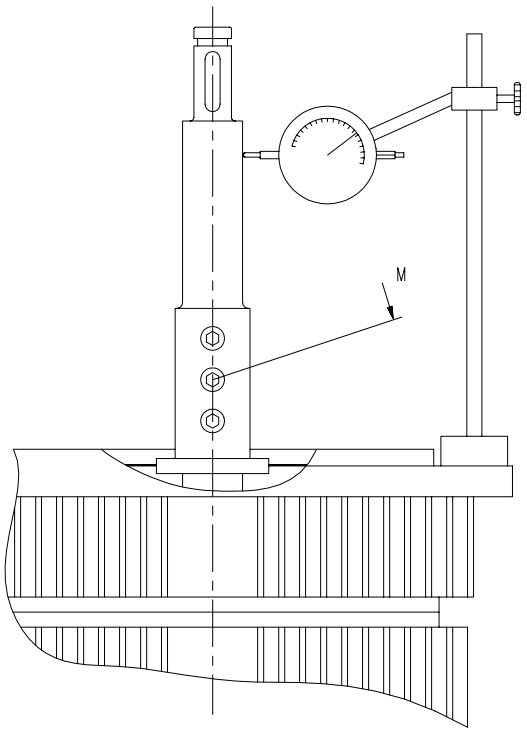

NOTE

The torque should be 5 Nm (0.5 kpm) and the maximum wobble 60 μm.

7. Check the wobble of the pump shaft with a dial indicator.
8. Assemble the pump as described above.

Maintenance of Ejector Pump

1.0.0 Maintenance of Ejector Pump

(If supplied from Alfa Laval)

The following instructions must be carefully observed whenever it becomes necessary to overhaul or repair the above mentioned pump. Please refer to drawing for item references in the text.

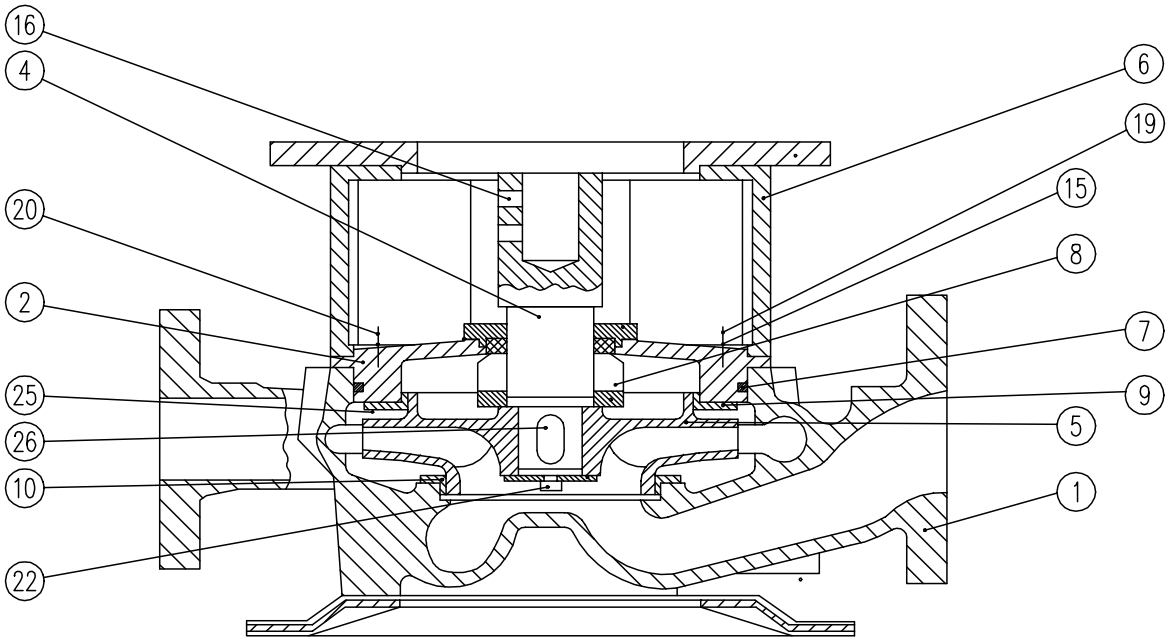

1.1.0 Overhaul of the Pump

1. Remove the **set screws 19** in **pump cover 2.**

   *Motor with motor bracket 6, pump cover 2, and impeller 5 can now be lifted clear of the **pump casing 1.***

2. Unscrew the **screw 22** (right-hand thread).

3. Remove impeller.

> **NOTE**
>
> Normally, the impeller can be removed without using dismantling tools.
>
> If not, you can fit dismantling screws into the two threaded holes in the impeller.

4. Remove the key 26 and the mechanical seal 8 (including spring holder, spring and carbon ring).

5. Inspect the ceramic ring, the carbon ring and the spring. Replace, if necessary

   If mechanical seal has to be replaced, proceed as follows:

   - *Unscrew **set screw 20** to remove **pump cover 2** from **motor bracket 6** in order to gain access to ceramic ring.*

   In order to make it easier to assemble the mechanical seal, the shaft and ring seat may be greased with glycerine. Please also refer to separate instructions for mechanical seal delivered together with the seal.

   - *After fitting the ceramic ring, fit **pump cover 2** to **motor bracket 6.***
   - *Fit carbon ring, spring and spring holder.*

6. Clean drilled cooling water channel in **pump cover 2.**

7. Inspect impeller and threaded holes for clogging.

8. **Remember to change the O-ring 7.**

9. Reassemble in reverse order.

1.1.1 Clearance

In connection with the inspection, the **impeller 5** and **wear rings 10** are measured in order to secure that the clearance is not larger than stated in the diagram below.

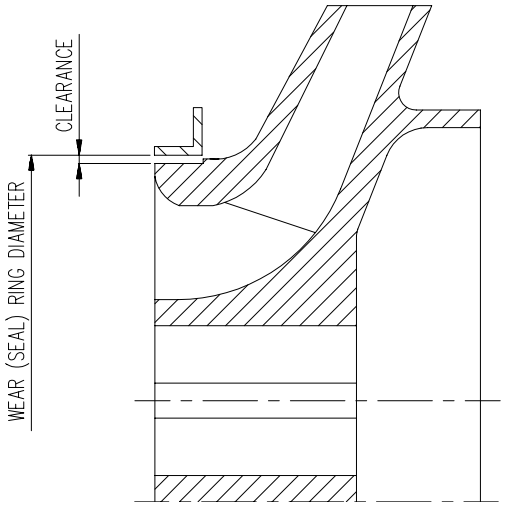

Wear ring Ø	Clearance maximum	Clearance minimum
100 mm	0.5 mm	0.15 mm
150 mm	0.6 mm	0.2 mm
200 mm	0.7 mm	0.25 mm
250 mm	0.8 mm	0.28 mm
300 mm	0.85 mm	0.3 mm
350 mm	0.9 mm	0.3 mm

If the clearance is too big, replace wear rings as follows:

1. Unscrew **countersunk screws 25.**
2. Pull out wear (seal) rings.
3. Fit new wear rings and tighten countersunk screws.

CAUTION

The pump shaft may only be dismantled, if pump shaft or bearings, in the electric motor have to be replaced.

Carefully observe instructions for “Dismantling pump shaft”.

1.1.2 Dismantling Pump Shaft

If the **shaft 4** has to be dismantled due to a defect or if electric motor bearing has to be replaced, proceed as follows:

1. Unscrew **pointed screws 16.**

2. Remove **shaft 4**. Normally this can be done without using dismantling tools.

CAUTION

DO NOT grind the motor shaft.

3. Fit **shaft 4.**

4. In order to make sure that the coupling is fitted correctly, tap slightly at the shaft end with a RUBBER hammer.

5. Tighten **pointed screws 16** with a torque of 35 Nm (3.5 kpm).

Salinometer

1.0.0 Salinometer Type DS-20

1.1.0 Technical Specification

Function	Measuring (Dot Bar) and supervising salinity of freshwater produced by seawater desalination.
Supply voltage	90-120 V or 200-240 V AC.
Frequency	50/60 Hz
Power consumption	Salinometer 10 VA.
Relay contacts	Max. load 100 VA.
Salinity display	0,5 - 20 ppm (Dot Bar).
Temperature correction	Automatic in the range 5 - 85°C.
Alarm level	Can be set to any value between 0,5 - 20 ppm.
Test	Can be checked by test switch, 10 ppm.
Output	4-20 mA Current Loop.
Max. ambient temperature	55°C.
Protection degree	IP 54.

1.2.0 Installation (for DS-20)

1. Open front cover.
2. Select correct voltage select according to the main supply voltage 115 V or 230 VAC.
3. Screw salinometer on to bulkhead with six nuts.
4. Connect necessary cables to the terminals.
5. Close front cover.
6. Test salinometer function (see instructions for use).

1.3.0 Instructions for use

1. Switch on mains.
2. Switch on sec. alarm.

   Green pilot LED should light up. Dot. Bar displays the measured salinity.

1.3.1 Testing the Instrument

WARNING

The salinometer must be tested at least once a month, and the electrode unit must be cleaned.

Push TEST switch on.

The Dot Bar should read 10 ppm.

If the alarm level is less than 10 ppm, the salinometer will give an alarm.

1.3.2 Adjustment of Alarm Level

1. Switch “MAINS” on.
2. Push sec. alarm off.
3. Adjust Alarm Set to desired alarm level by using the switches.
4. Switch “Sec. Alarm” on.

The salinometer is now ready for use.

If the salinity exceeds the alarm level,

- The two red alarm LEDS flash.
- Solenoid valve is activated.
- Buzzer (if fitted) and external alarm system is activated.

Cancel buzzer and external alarm system by switching “Sec. Alarm” off. Solenoid valve is not affected.

Switch “Sec. Alarm” on as soon as the salinity is normal again; i.e. when the two red

LEDS are off.

1.3.3 Maintenance

CAUTION

Remove electrode unit and inspect/clean after every 1000 hours of operation. Use a clean and dry rag. Avoid touching the electrodes with the fingers.

Spare Parts

1.0.0 Ordering Spare Parts

When ordering spare parts please always state:

1. Serial number.
2. Capacity.
3. Designation.
4. Spare parts drawing number.
5. Position number.
6. Article number.

In order to identify article numbers, please refer to FWG Order Specification and other drawings.

When ordering parts for pumps proceed as follows:

1. Find article number in the list of drawings.
2. Check spare part drawing and item list with corresponding article number to identify the item to be ordered.

1.1.0 Alfa Laval Service

The **Alfa Laval** group is represented in all major ports of the world.

DO NOT hesitate to contact your **Alfa Laval** representative if you have any questions, problems or require spare parts.

Index

A

Adjustment of alarm level . . . . . page 46
Adjustment of Jacket Water Flow . . . . . page 12
Adjustment of sea cooling water . . . . . page 13
Adjustment of the freshwater production . . . . . page 16
Alfa Laval service . . . . . page 49
Alternative Steam . . . . . page 9

B

Before starting up the plant with steam injection equipment . . . . . page 14

C

Changing from steam injection heating to jacket cooling water . . . . . page 17
Chemical dosage . . . . . page 29
Cleaning . . . . . page 24
Clearance . . . . . page 42
Condensation . . . . . page 16

D

Dismantling pump shaft . . . . . page 44

E

Ejector Pump . . . . . page 41
Evaporation . . . . . page 15

F

Feed water ratio . . . . . page 29
Fitting new gaskets . . . . . page 24
Freshwater Pump Types PVVF 1525-1532-2040 . . . . . page 37
Freshwater Quality . . . . . page 8

I

Installation (for DS-20) . . . . . page 45
Instructions for use . . . . . page 46

L

Long term standstill . . . . . page 18

Index

M

Main Components . . . . . page 8
Maintenance . . . . . page 47
Maintenance of condenser section . . . . . page 22
Maintenance of ejector pump . . . . . page 41
Maintenance of evaporator section . . . . . page 21
Maintenance of Freshwater pump . . . . . page 37
Maintenance of freshwater pump types PVVF 1525-1532-2040 . . . . . page 37
Maintenance of separator vessel . . . . . page 20

O

Operating Hours . . . . . page 19
Ordering spare parts . . . . . page 49
Overhaul intervals . . . . . page 19
Overhaul of the pump . . . . . page 41

P

Perform regular maintenance duties . . . . . page 19
Preparation of new gaskets . . . . . page 24
Pressure testing separator . . . . . page 27
Prevention of scaling . . . . . page 29

R

Removal of old gaskets . . . . . page 23
Renewal of plate heat exchanger gaskets . . . . . page 23

S

Safety instructions and warnings . . . . . page 5
Safety precautions with the use of chemicals . . . . . page 31
Salinometer type DS-20 . . . . . page 45
Scale inhibitor dosage equipment for feed water . . . . . page 30
Spare Parts . . . . . page 49
Starting and Stopping Procedure . . . . . page 11
Starting up the plant with steam injection equipment (AS) . . . . . page 15
Starting-up the Plant with Jacket Cooling Water Heating . . . . . page 11
Stopping the plant . . . . . page 13
Stopping the plant working with steam injection heating . . . . . page 16

T

Technical specification . . . . . page 45
Telefax . . . . . page 5
Telephone . . . . . page 5
Test sheet . . . . . page 33
Testing the instrument . . . . . page 46
Trouble shooting table . . . . . page 33

W

Warning . . . . . page 5
Why you need to perform regular maintenance duties . . . . . page 19
Working Principle . . . . . page 7

Order Specification

Freshwater generator type:	D-PU-2-36-CAS125	Q'ty :	2 sets/ship

Customer :	SAMSUNG HEAVY INDUSTRIES CO.,LTD.	Hull No. :	H-1657/87

Technical data

Freshwater generator size	Capacity [m3/24h]:	65	NE1/NE2/NK:	52/52/52
Jacket water temperature	Inlet [°C]	91	Outlet [°C]	81.3
Jacket water flow/pressure drop	Flow [m3/h]:	96.1	Pressure drop [bar]:	0.3
Heat consumption from jacket water	[Mcal/h] :	-	or [kW]:	1089
Seawater temperature	Inlet [°C]	32.0	Outlet [°C]	41.2
Seawater flow/pressure drop	Flow[m3/h]:	88.0	Pressure drop [bar]:	0.2
Alternative steam heating:	Capacity [m3/24h]:	65		
Steam flow/pressure	Flow [kg/h]:	1918.0	Pressure [barg]:	7

Basic data

		(X)		(X)		(X)	Other (Not standard)
Main power	3x380V/50 Hz		3x440/60 Hz	x	3x460V/60 Hz		
Control voltage	100 V		110-115 V		220-230 V	x	
Flange connection	DIN		ANSI		JIS	x	
Painting colour	Blue C303-B		Munsell 7,5 BG 7/2	x	Munsell 2,5 G 7/2		
Classification society	Workshop certificate						

Scope of supply

	Set / Unit
Basic equipment :	
Structure incl. freshwater pump, standard spares, standard packing and plates:	1
Steam equipment :	1
Additional equipment necessary for operation :	
Control panel with motor starters and salinometer	1
Freshwater pump :	1
Electric motor for freshwater pump :	1
Feed water treatment :	1
Optional equipment / design :	
Control panel (Option A) build-on the unit - Left side	1
Feed water treatment build-on the unit - Right side	1
Water clock by-pass:	1
Return pipe to brine:	1
Special painting: Control panel, Freshwater motor (Munsell No.: 7.5 BG 7/2)	1
Steel box for spare part kit:	1
Other - Not standard:	
Item 1 Thermometer with thermowell for S.W inlet to be supplied as loose.	1
Item The name plates for all instruments to be fitted.	1
Item The root valves for pressure gauges to be provided.	1
Comments:	

Order Specification filled in by:		Order Specification review at Desalt
Name:	SSM	Reviewed by:
Date:	2006.06.28	Date:

9.2.4.2-4 Technical data, Pump and Motor for D-PU-2-36-C(AS)125

No. of plates NE/NK		50/50/50-58/58/58	
Pump function		***Freshwater**	**Ejector**
Pump type		PVVF-2040	CNL 80-80/200
Motor type		71 B	160 L
Nom. Flow x pressure	m3/h x mwc	2.1 x 28	88 x 38
Impeller size	50 Hz: mm	ø149	ø192
Impeller size	60 Hz: mm	ø128	ø168
Rotating speed	50 Hz: RPM	2820	2915
Rotating speed	60 Hz: RPM	3360	3515
3 x 380 V 50 Hz			
Rated output power	kW	0,55	18,6
Consumed power	kW	0,67	18,2
Current (full load)	A	1,4	33,5
Current (start)	A	7	211
3 x 440 V 60 Hz			
Rated output power	kW	0,75	21,4
Consumed power	kW	0,75	18,2
Current (full load)	A	1,6	33,5
Current (start)	A	7	211
3 x 460 V 60 Hz			
Rated output power	kW	0,75	21,4
Consumed power	kW	0,75	18,2
Current (full load)	A	1,5	32
Current (start)	A	7	211

* Unit are equipped with two freshwater pumps.

Illustrations, indications of material, dimensions and weights etc. herein, do not constitute any commitment on our part. We reserve the right to change such specification when necessary.

9.2.4.1 General description, D-PU-2-36-C(AS)100/125

Application

Conversion of seawater into freshwater by vacuum distillation, for drinking, process water, and domestic
Use on ships and rigs, and in small power stations. Max. salinity 2 ppm.

Capacity

The D-PU-2-36-C(AS)100/125 covers capacity range from 20 to 75 m3/24h, depending on the heating
medium and seawater temperature. The capacities shown below are at a seawater temperature of 32°C.

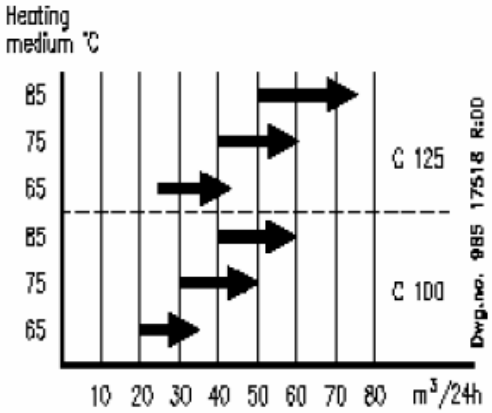

Working principle

The seawater to be distilled evaporates at a temperature of about 70°C as it passes between the hot
Plates in the heat exchanger. The boiling temperature corresponds to a vacuum of about 70%, which is maintained in stage one by a brine/air ejector.
The steam generated passes through a demister where any drops of seawater entrained in the steam are removed and allowed to the bottom of the distiller chamber.
The steam is then led through a connecting pipe to the lower heat exchanger in stage two where it is condensed into fresh water. During condensation, the heat of evaporation is transferred to the feed water (brine) obtained from stage one. The brine boils at a temperature of about 45°C, corresponding to a vacuum of about 90%, which is maintained in stage two by the combined brine/air ejector.
As in stage one, the generated steam passes through a demister to remove any entrained seawater, which is collected at the bottom of the distiller chamber of stage two.
The steam then continues to the upper heat exchanger in stage two where it is condensed into fresh water.
The heat transferred to seawater used for cooling the condenser is utilized by employing a part of the condenser outlet water as feed for stage one.

Illustrations, indications of material, dimensions and weights etc. herein, do not constitute any commitment on our part. We reserve the right to change such specification when necessary.

9.2.4.1 General description, D-PU-2-36-C(AS)100/125

Basic equipment

Titanium plate heat exchanger in evaporator and condenser.
Stainless steel separator and stainless steel demister, front cover and pressure plates.
Seawater pipes in CuNi.
The freshwater generator is equipped for jacket water heating and with a combined condenser and ejector water system. Furthermore the freshwater generator is equipped with dump valve, water clock, automatic feed water regulator, combined brine/air ejector, instruments, freshwater pump with electric motor, internal piping and bed frame.

Options

Flanges: JIS

Power/control: 3 x 440 V 60 Hz 100/110/220 V

Additional equipment necessary for operation

- Control panel with motor starters and salinometer
- Feed water treatment

Optional equipment/design

- Steam heating system type CAS and CS
- Salinometer
- Manual motor starters and salinometer
- Remote start/stop
- Water clock by-pass
- Return pipe to brine sump
- Electric panel build-on the unit
- Steel box for spares kit
- Freshwater treatment equipment

Illustrations, indications of material, dimensions and weights etc. herein, do not constitute any commitment on our part. We reserve the right to change such specification when necessary.

9.2.4.2-3 Technical data, D-PU-2-36-C(AS)125

Power consumption

Freshwater pump:

60 Hz
0,75 kW

Pressure

	bar(g)	lbs/in2
Max. jacket water pressure:	4,0	58
Max. back pressure to freshwater tank	1,6	23
Max. seawater pressure to inlet condenser:	4,0	58
Min. seawater pressure to ejector:	3,0	43
Max. back pressure at ejector outlet:	0,6	8,7
Max. back pressure for safety valve on steam equipment:	1,0	14,5
Max. steam pressure for steam equipment:	7,0	101
Normal operation for steam equipment:	2 – 4,5	29-65
Back pressure to condensate well for steam equipment:	0,6 – 0,8	8,7 – 11,6

Temperature

Seawater temperature: 0 – 32°C Jacket water temperature: 55 – 95°C

Flow

Seawater flow: 88 m3/h Jacket water flow: 54 – 130 m3/h

Materials

Separator:	Stainless steel
Front cover:	Stainless steel
Bed frame:	Steel (hot dip galvanized)
Pipe for brine discharge:	SG-iron (hot dip galvanized)
Evaporator/condenser plates:	Titanium
Demister:	Stainless steel
Pipe for seawater:	CuNi 90/10
Pipe for freshwater:	CuNi 90/10
Combined brine/air ejector housing:	Red brass
Combined brine/air ejector nozzle:	Stainless steel
Flange for evaporator/condenser:	SG-iron (hot dip galvanized)
Steam equipment type JWSP and SP	
Pipe:	Steel (hot dip galvanized)
Steam injector housing:	SG-iron (painted)
Steam injector nozzle:	Stainless steel

Shipping data

Freshwater generator, complete with ejector pump, electrical panel, dosing unit and standard spares.

Weight:	Net: 2650 kg, gross: 2800 kg
Dimensions:	l x w x h: 2700 x 1500 x 2400 mm
Volume:	9,7 m3

Illustrations, indications of material, dimensions and weights etc. herein, do not constitute any commitment on our part. We reserve the right to change such specification when necessary.

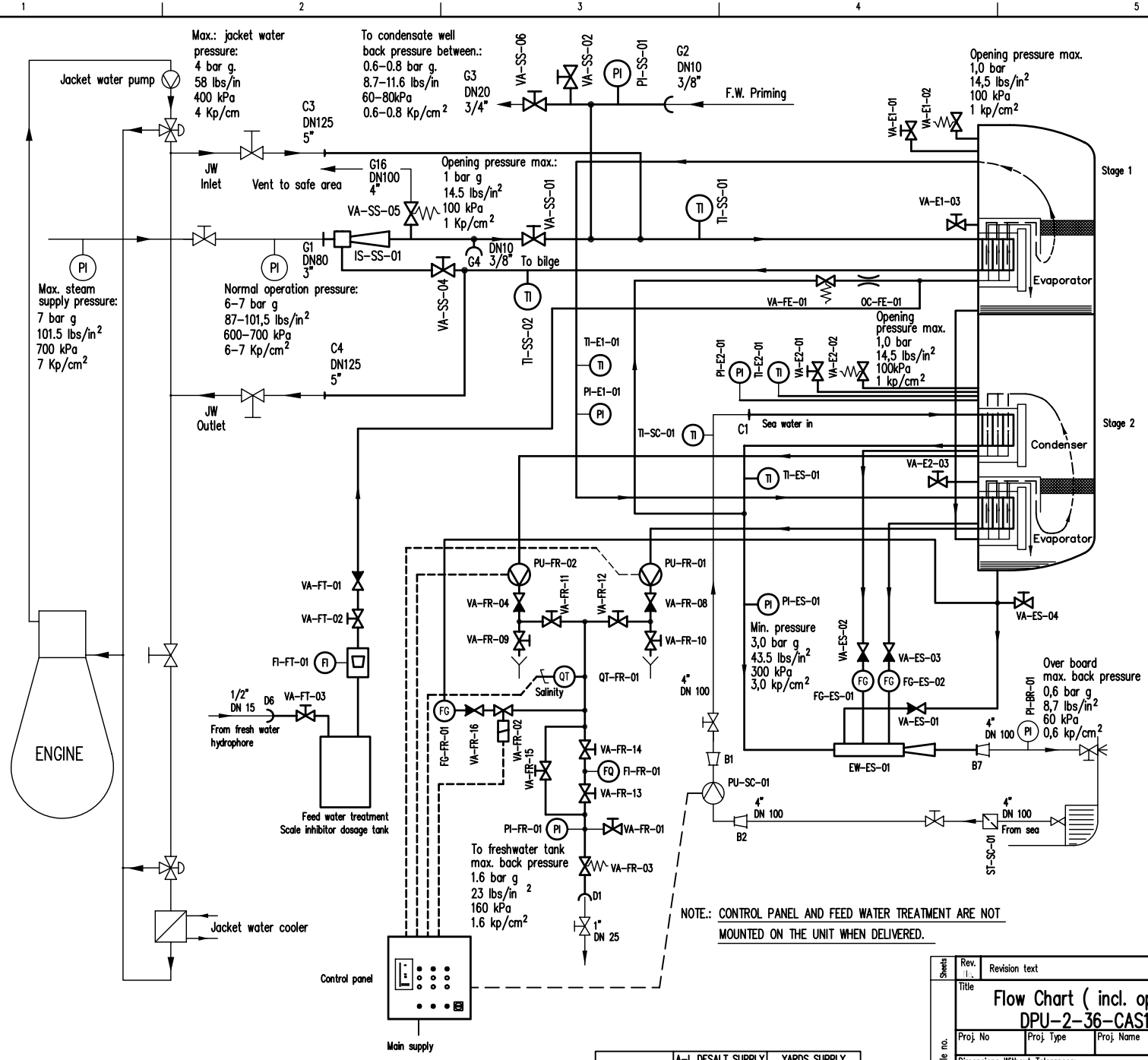

TAG	DESCRIPTION
EW-ES-01	EJECTOR
FI-FR-01	WATER METER
FI-FT-01	FLOW INDICATOR
FG-ES-01	FLOW SIGHT GLASS
FG-ES-02	FLOW SIGHT GLASS
FG-FR-01	FLOW SIGHT GLASS
IS-SS-01	INJECTOR
OC-FE-01	ORIFICE
PI-BR-01	PRESSURE GAUGE
PI-ES-01	PRESSURE GAUGE
PI-E1-01	MANO/VACUUM GAUGE
PI-E2-01	MANO/VACUUM GAUGE
PI-FR-01	PRESSURE GAUGE
PI-SS-01	MANO/VACUUM GAUGE
PU-FR-01	FRESHWATER PUMP
PU-FR-02	FRESHWATER PUMP
PU-SC-01	EJECTOR PUMP
QT-FR-01	ELECTRODE UNIT
ST-SC-01	STRAINER
TI-ES-01	THERMOMETER
TI-E1-01	THERMOMETER
TI-E2-01	THERMOMETER
TI-SC-01	THERMOMETER
TI-SS-01	THERMOMETER
TI-SS-02	THERMOMETER
VA-ES-01	NON RETURN VALVE
VA-ES-02	NON RETURN VALVE
VA-ES-03	NON RETURN VALVE
VA-ES-04	BALL VALVE
VA-E1-01	AIR SCREW
VA-E1-02	SAFETY VALVE
VA-E1-03	AIR SCREW
VA-E2-01	AIR SCREW
VA-E2-02	SAFETY VALVE
VA-E2-03	AIR SCREW
VA-FE-01	SPRING LOADED VALVE
VA-FR-01	BALL VALVE
VA-FR-02	SOLENOID VALVE
VA-FR-03	SPRING LOADED VALVE
VA-FR-04	NON RETURN VALVE
VA-FR-08	NON RETURN VALVE
VA-FR-09	VALVE
VA-FR-10	VALVE
VA-FR-11	VALVE
VA-FR-12	VALVE
VA-FR-13	VALVE
VA-FR-14	VALVE
VA-FR-15	VALVE
VA-FR-16	NON RETURN VALVE
VA-FT-01	NON RETURN VALVE
VA-FT-02	VALVE
VA-FT-03	VALVE
VA-SS-01	BUTTERFLY VALVE
VA-SS-02	BALL VALVE
VA-SS-03	BALL VALVE
VA-SS-04	BUTTERFLY VALVE
VA-SS-05	SAFETY VALVE
VA-SS-06	SEATED VALVE

Sheets	Rev.	Revision text	Date	Drawn	Checked	Appr.
Article no.	Title: Flow Chart (incl. options) DPU-2-36-CAS125					
	Proj. No	Proj. Type	Proj. Name			
	Dimensions Without Tolerances: ISO 2768-M or ISO 13920-B			Size A2	Location: Alfa Laval Copenhagen A/S – Denmark	
	Date 27.06.2006	Drawn MFN	ISO Method E	Scale	Drawing No 985 18816	Rev. 02
	Checked MFN	Approved JNS		Sheet 2		

Only to the extent expressly agreed by us this document may constitute a contractual obligation on our part.

This document and its contents are our exclusive property and must not be copied, reproduced, transmitted or communicated to any other party or used for purposes not expressly permitted by us.

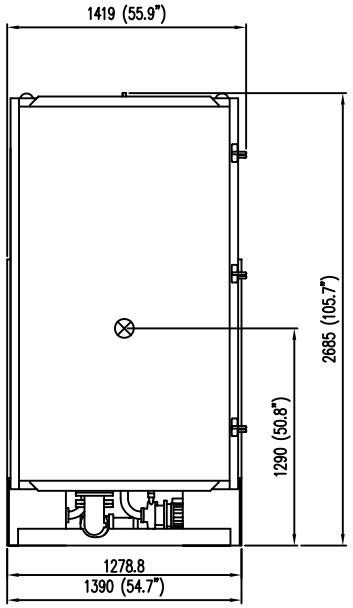

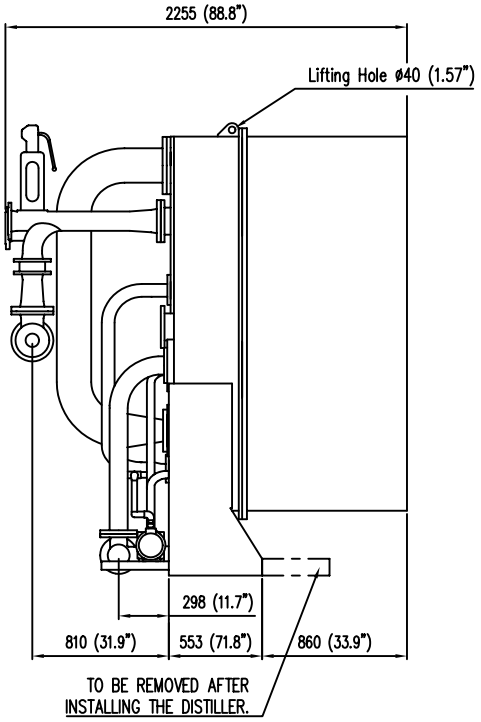

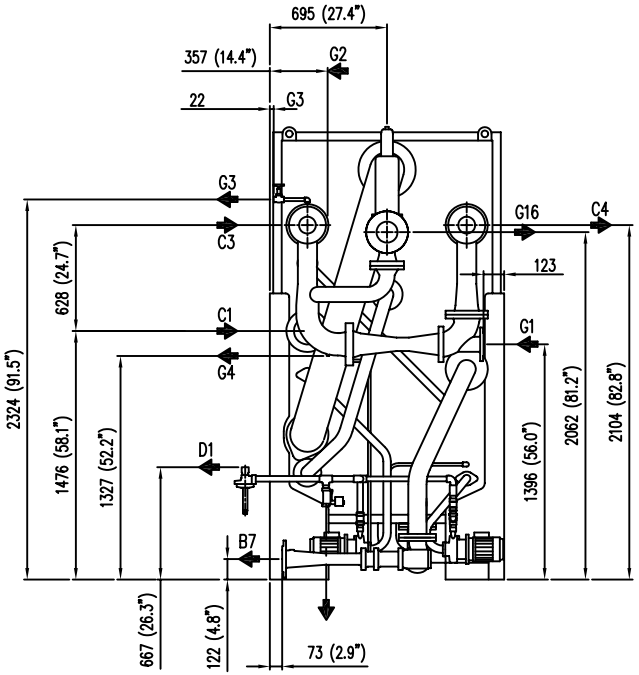

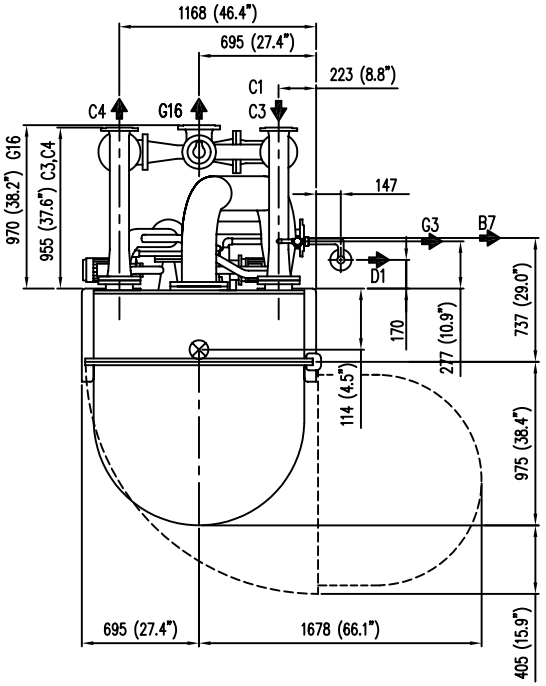

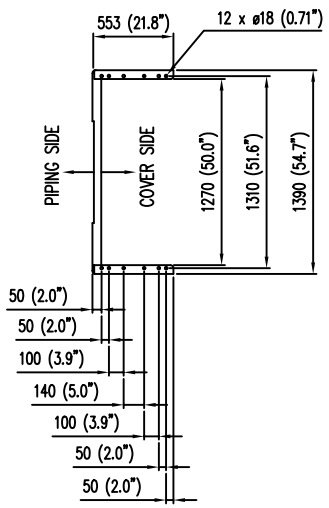

B7: SEAWATER BRINE & AIR OUT
C1: SEAWATER IN
C3: JACKET WATER IN
C4: JACKET WATER OUT
D1: FRESHWATER TO TANK
G1: STEAM INLET
G2: FRESHWATER PRIMING
G3: TO CONDENSATE WELL
G4: TO BILGE
G16: STEAM RELIEF VALVE OUT

CONNECTIONS FITS TO DIN/ANSI/JIS

	FLANGES: DIN 2632 THREADS: BSP FEMALE DIMENSIONS IN MILLIMETERS				FLANGES: ANSI 150 lb THREADS: NPT FEMALE DIMENSION IN INCHES				FLANGES: JIS B2220-1990 THREADS: BSP FEMALE DIMENSIONS IN MILLIMETERS			
	OD	ID	PCD	HOLES	OD	ID	PCD	HOLES	OD	ID	PCD	HOLES
B7	220	100	180	8 ø18	9	4	71/2	8 ø3/4	210	100	175	8 ø19
C1	220	100	180	8 ø18	9	4	71/2	8 ø3/4	210	100	175	8 ø19
C3	220	100	180	8 ø18	9	4	71/2	8 ø3/4	210	100	175	8 ø19
C4	220	100	180	8 ø18	9	4	71/2	8 ø3/4	210	100	175	8 ø19
D1	25 BSP				1 NPT				25 BSP			
G1	285	150	240	8 ø22	11	6	91/2	8 ø7/8	280	150	240	8 ø23
G2	10 BSP				3/8 NPT				10 BSP			
G3	20 BSP				3/4 NPT				20 BSP			
G4	10 BSP				3/8 NPT				10 BSP			
G16	285	150	240	8 ø22	*				280	150	240	8 ø23

* G16 to be delivered with DIN blind flange.

Measurements ±5 mm (0,2 in)
NOTE: Electric components not fitted and wired for DC.

⊗ Centre of gravity

WEIGHT IN OPERATION
Max. 2780 kg (6130 lbs)

Title: Dimensional drawing. DPU-2-36-CAS125

Location: Alfa Laval Copenhagen A/S – Denmark

MDPC No.: 9.2.4.5-2

Edition: 21.06.2006

Drawn: MFN

Drawing No.: 985 17332

Rev.: 00

Illustrations, indications of material, dimensions and weights etc. herein, do not constitute any commitment on our part. We reserve the right to change such specifications when necessary.

Only to the extent expressly agreed by us this document may constitute a contractual obligation on our part.

This document and its contents are our exclusive property and must not be copied, reproduced, transmitted or communicated to any other party or used for purposes not expressly permitted by us.

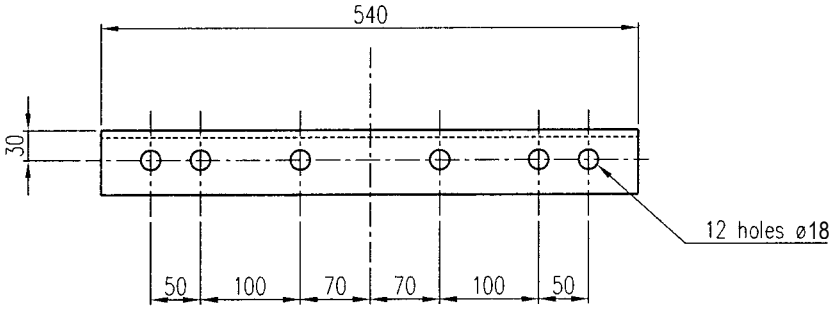

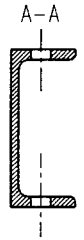

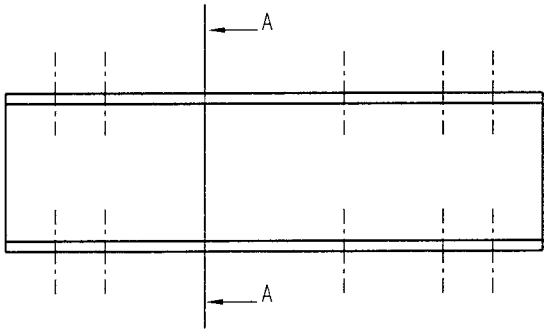

EN 10025
UNP 160 mm
MATERIAL: S235JRG2
TOLENRANCE: DIN 1026/1
BURRS AND EDGES TO BE REMOVED.
HOT DIP GALVANIZED.

Only to the extent expressly agreed by us this document may constitute a contractual obligation on our part.

This document and its contents are our exclusive property and must not be copied, reproduced, transmitted or communicated to any other party or used for purposes not expressly permitted by us.

Rev.	Revision	Date	Revised	Reviewed	Approved

Alfa Laval
Alfa Laval Copenhagen A/S
DENMARK

Title: Extension Legs, SHI
UNP–profil, h:160 mm

Dimensions without tolerances: DS/EN 22768–M or ISO 13920–B
ISO method E
Scale 1:5
Size A3
Project name: Production Drawing.
Project type: DPU VSP REX
Project no.

Date	Drawn	Reviewed	Approved
06.01.04	AH	MFN	MFN

Replace dwg. no.

Drawing No. 985 20267
Rev. 00

Sheets 2
Article no. 985 20267–80

Tilsvejsningsflanger med krave.

Weldneck Flange.

PN 10 DIN 2632

PN 16 DIN 2633

PN 40 DIN 2635

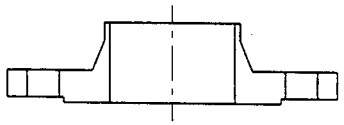

Nomial Pressure PN10 K10

NOMINEL	DS/EN 1092-1			ASA 150 lb			JIS B2220		
DN - INCH	BCD/PCD	ø	A	BCD/PCD	ø	A	BCD/PCD	ø	A
6 - 1/8"									
8 - 1/4"									
10 - 3/8"							65	15	4
15 - 1/2"	65	14	4	60.3	16	4	70	15	4
20 - 3/4"	75	14	4	69.8	16	4	75	15	4
25 - 1"	85	14	4	79.4	19	4	90	19	4
32 - 1 1/4"	100	18	4	88.9	19	4	100	19	4
40 - 1 1/2"	110	18	4	98.4	16	4	105	19	4
50 - 2"	125	18	4	120.6	19	4	120	19	4
65 - 2 1/2"	145	18	4	139.7	19	4	140	19	4
80 - 3"	160	18	8	152.4	19	4	150	19	8
100 - 4"	180	18	8	190.5	19	8	175	19	8
125 - 5"	210	18	8	215.9	23	8	210	23	8
150 - 6"	240	22	8	241.3	23	8	240	23	12
200 - 8"	295	22	8	298.4	23	8	290	23	12
250 - 10"	355	26	8	361.9	26	12	355	24	12

Nomial Pressure PN16 K16

NOMINEL	DS/EN 1092-1			ASA 300 lb			JIS B2220		
DN - INCH	BCD/PCD	ø	A	BCD/PCD	ø	A	BCD/PCD	ø	A
6 - 1/8"									
8 - 1/4"									
10 - 3/8"							65	15	4
15 - 1/2"	65	14	4	66.7	16	4	70	15	4
20 - 3/4"	75	14	4	82.5	16	4	75	15	4
25 - 1"	85	14	4	88.9	19	4	90	19	4
32 - 1 1/4"	100	18	4	98.4	19	4	100	19	4
40 - 1 1/2"	110	18	4	114.3	16	4	105	19	4
50 - 2"	125	18	4	127.0	19	8	120	19	8
65 - 2 1/2"	145	18	4	149.2	23	8	140	19	8
80 - 3"	160	18	8	168.3	23	8	160	23	8
100 - 4"	180	18	8	200	23	8	185	23	8
125 - 5"	210	18	8	234.95	23	8	225	25	8
150 - 6"	240	22	8	269.9	26	12	260	25	12
200 - 8"	295	22	12	330.2	26	12	305	25	12
250 - 10"	355	26	12	3877.3	26	12	380	27	12

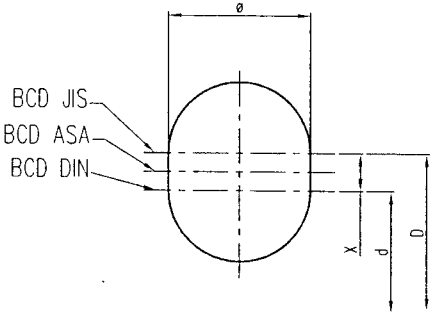

Rev. No.	Revision text	Date	Drawn	Checked	Appr.
08	MFN Info on text.	29.06.2005	MFN	MFN	JBN
07	Flanges type att.	22.02.2005	MFN	MFN	JBN
06	NOMINEL has ben opdate.	18.02.2005	MFN	MFN	JBN
05	Att PN 10 and K10	11.11.04	MFN	MFN	PJE
04	Att Nomial Pressure200 and 250.	27.8.04	MFN	MFN	PJE
03	New Drawing Head	22.10.03	MFN	MFN	PJE
02	250/10" added	04.12.90	AJE	FRE	EWA
01	250/10" added	04.01.89	AJE	FRE	EWA

Sheets: 2

Article no: 984 70193-80

Title: Standard for holes in flanges PN 10 PN 16

Proj. No	Proj. Type	Proj. Name
		INFO Drawing.

Dimensions Without Tolerances: ISO 2768-M or ISO 13920-B

Size: A2

Date	Drawn	ISO Method E	Scale
18.02.2005	MFN		1: 2

Checked	Approved	Sheet
MFN	JBN	2

Location: Alfa Laval Copenhagen A/S - Denmark

Drawing No: 984 70193 Rev: 08

Only to the extent expressly agreed by us this document may constitute a contractual obligation on our part.

This document and its contents are our exclusive property and must not be copied, reproduced, transmitted or communicated to any other party or used for purposes not expressly permitted by us.

9.2.4.4-2 Equipment specification, D-PU-2-36-C(AS)125

Equipment supplied by Alfa Laval:

Tag no	Description	Article no	Connection
	Unit:		
EW-ES-01	Ejector	See specification	-
FG-ES-01	Flow sight glass	984 35686-00	½" BSP
FG-ES-02	Flow sight glass	984 35686-00	½" BSP
FI-FR-01	Water meter	985 42600-04	¾ " BSP
FI-FT-01	Flow indicator	984 30345-00	3/8'' BSP
OC-FE-01	Orifice	See specification	-
PI-ES-01	Pressure gauge	984 30297-00	¼" BSP
PI-E1-01	Mano/vacuum gauge	984 30308-00	3/8" BSP
PI-E2-01	Mano/vacuum gauge	984 30308-00	3/8" BSP
PI-FR-01	Pressure gauge	984 30298-00	¼" BSP
PU-FR-01	Freshwater pump	See specification	-
PU-FR-02	Freshwater pump	See specification	-
QT-FR-01	Electrode unit	984 22500-00	-
TI-ES-01	Thermometer	984 30366-00	½" BSP
TI-E1-01	Thermometer	984 30366-00	½" BSP
TI-E2-01	Thermometer	984 30366-00	½" BSP
VA-ES-01	Non return valve	984 35501-00	DN 50
VA-ES-02	Non return valve	984 35686-00	½" BSP
VA-ES-03	Non return valve	984 35686-00	½" BSP
VA-E1-01	Air screw	984 40939-03	3/8" BSP
VA-E1-02	Safety valve	984 35360-00	1" BSP
VA-E2-01	Air screw	984 40939-03	¼" BSP
VA-E2-02	Safety valve	984 35360-00	1" BSP
VA-FE-02	Spring loaded valve	984 35535-00	DN 40
VA-FR-02	Solenoid valve	See specification	-
VA-FR-03	Spring loaded valve	984 35537-00	1" BSP
VA-FR-04	Non return valve	984 35672-00	1" BSP
VA-FR-08	Non return valve	984 35672-00	1" BSP
VA-FR-09	Valve	984 35683-00	½''BSP
VA-FR-10	Valve	984 35683-00	½''BSP
VA-FR-11	Valve	984 35639-00	1''BSP
VA-FR-12	Valve	984 35639-00	1''BSP
VA-FT-01	Non return valve	984 35623-00	3/8" BSP
VA-FT-02	Valve	984 30345-00	3/8" BSP
VA-FT-03	Valve	984 35542-00	½''BSP
	Control panel*	See specification	-

*Normally supplied by Alfa Laval

** Type CAS

Illustrations, indications of material, dimensions and weights etc. herein, do not constitute any commitment on our part. We reserve the right to change such specification when necessary.

	Steam arrangement**		
IS-SS-01	Steam injector	See specification	-
PI-SS-01	Mano/vacuum gauge	984 30285-00	3/8'' BSP
TI-SS-01	Thermometer	984 30366-00	½" BSP
TI-SS-02	Thermometer	984 30366-00	½" BSP
VA-SS-01	Butterfly valve	984 35634-00	DN 125
VA-SS-02	Safety valve	See specification	-
VA-SS-03	Ball valve	984 35618-00	3/8" BSP
VA-SS-04	Seated valve	985 56110-04	¾'' BSP
VA-SS-05	Butterfly valve	984 35635-00	DN 150

Illustrations, indications of material, dimensions and weights etc. herein, do not constitute any commitment on our part. We reserve the right to change such specification when necessary.

Highest plant installation position in reference to lowest water line (BWL).

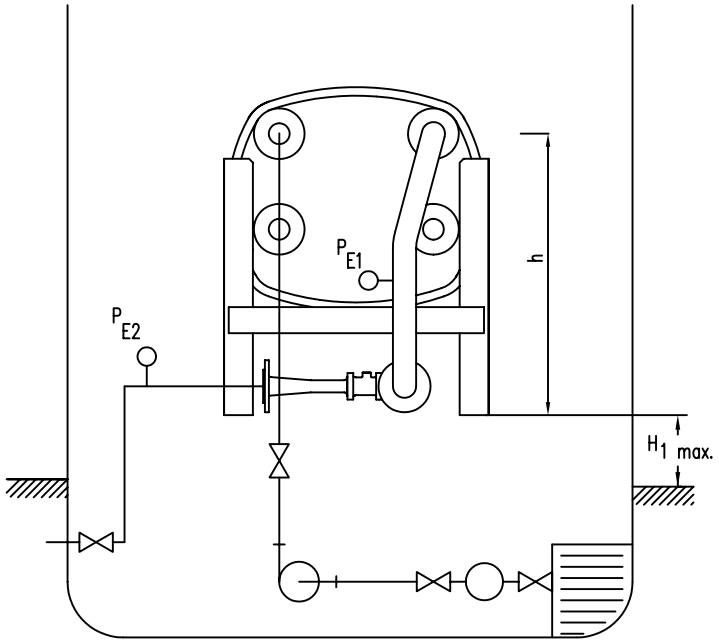

Lowest plant installation position in reference to highest water line (LWL).

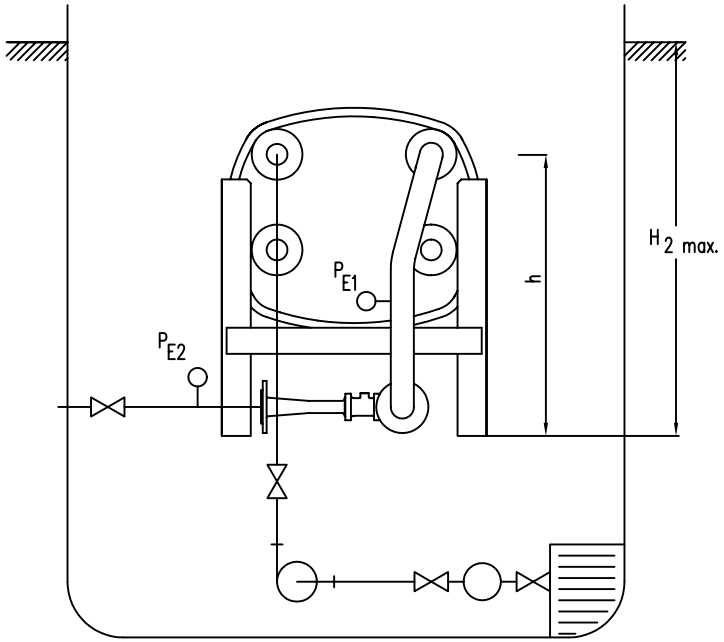

The stated installation heights are given under the conditions that the line pressure drop does not exceed 0.1 bar (1.5 lbs/in^2) which should account for all normal installations. If the 0.1 bar (1.5 lbs/in^2) is exceeded the heights must be diminished accordingly.

Freshwater Generator type	P_{E2} max. bar (lbs/in^2)	h mm	Highest vertical plant positioning		Lowest vertical plant positioning	
			P_{E1} min. bar (lbs/in^2)	H_1 max. mm	P_{E1} max. bar (lbs/in^2)	H_2 max. mm
P-16	0.5 (7.3)	913	3 (43.5)	3000	3.85 (55.8)	5000
P-26	0.6 (8.7)	1100		4000		6000
D-PU-36		1500				
D-PU-2-36						

In order to minimize the pressure drop we recommend to avoid the use of seat valves in the system.

Ejector pump is not self priming.

Title: Vertical plant positioning. JWP-16/26 and DPU-(2)-36			
Location: Alfa Laval Copenhagen A/S – Denmark		MDPC No. 9.2.8-1	
Edition: 05.01.2005	Drawn: MFN	Drawing No. 985 17495	Rev. 01

Illustrations, indications of material, dimensions and weights etc. herein, do not constitute any commitment on our part. We reserve the right to change such specifications when necessary.

Only to the extent expressly agreed by us this document may constitute a contractual obligation on our part.

This document and its contents are our exclusive property and must not be copied, reproduced, transmitted or communicated to any other party or used for purposes not expressly permitted by us.

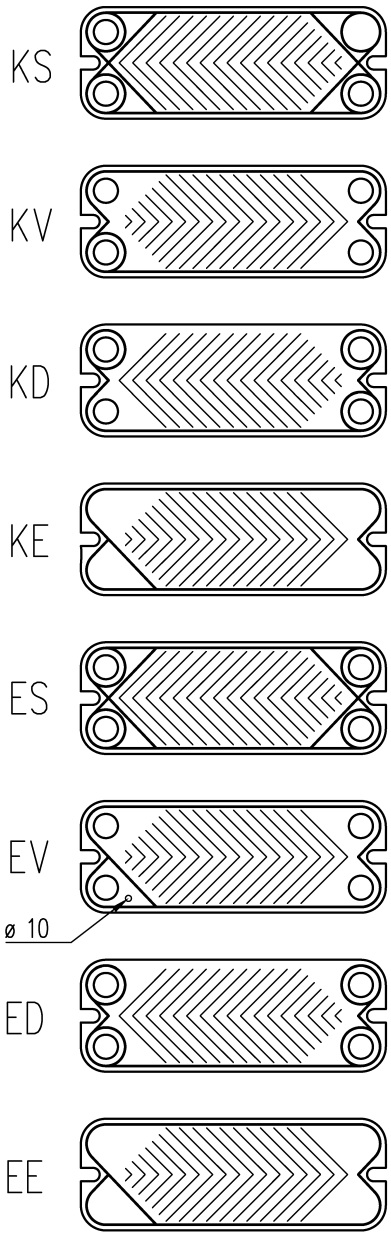

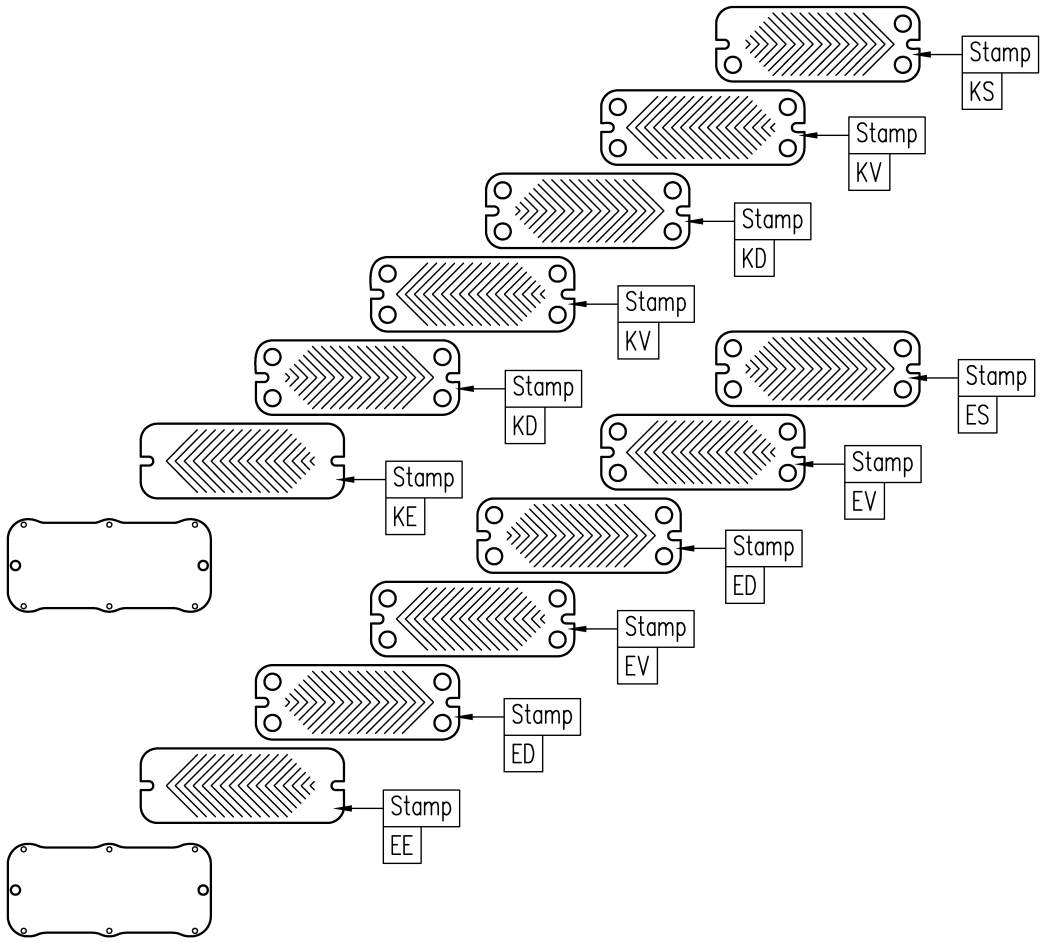

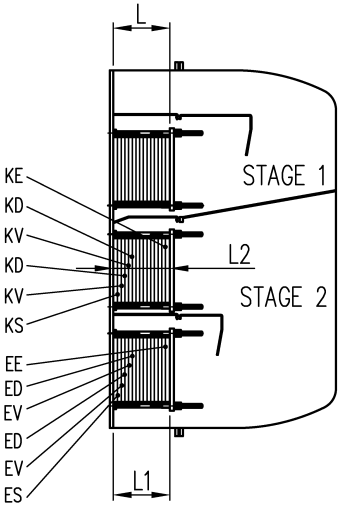

Only to the extent expressly agreed by us this document may constitute a contractual obligation on our part.

This document and its contents are our exclusive property and must not be copied, reproduced, transmitted or communicated to any other party or used for purposes not expressly permitted by us.

Rev. No.	Revision text	Date	Drawn	Checked	Appr.
02	Stage 1 in dwg.no.985 20556-R00	15.09.2005	BGU	HPA	HPA
01	New drawing head.	07.06.04	MFN	MFN	PJE

Sheets

Article no.

Title: ASSEMBLY SCHEME STAGE 2

Proj. No	Proj. Type	Proj. Name
		D-PU-2-36-C100/125

Dimensions Without Tolerances:	Size
ISO 2768-M or ISO 13920-B	A3

Date	Drawn	ISO	Scale
19.04.94	AJE	Method E	1:5
Checked: AJE	Approved: XXX		Sheet: 2

Location: Alfa Laval Copenhagen A/S – Denmark

Drawing No: 985 15915 Rev.: 02

O:\PT\Desal Share\Technic\TEGNING\TIL Q Drev\985\15\15915-R02.dwg

Rev. 00

Drawing no. 985 16684

PUMP TYPE	PVVF-2040	ART. NO.	984 10253-00
VOLTAGE	3 x 440 V	FREQUNCY	60 Hz

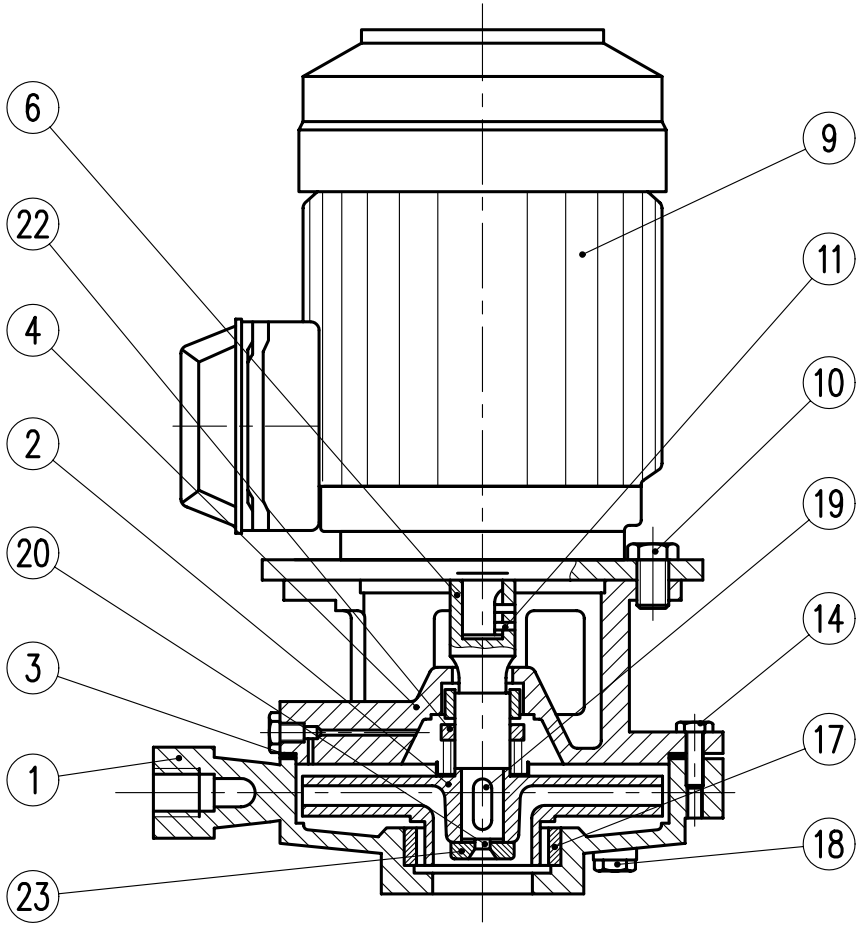

ITEM.	DESCRIPTION	NO. OFF	MATERIALS	ARTICLE NO.
1	PUMP HOUSING	1	RG 5	984 10252-01
2	IMPELLER ø128	1	RG 9	984 10253-02
3	GASKET	1	UNILON	984 10252-03
4	PUMP COVER, INCL. GASKET	1	RG 5	984 10252-04
6	SHAFT, INCL. KEY ETC.	1	AISI 316	984 10230-05
9	ELECTRICAL MOTOR	1	ALUMINIUM	984 20313-00
10	SET SCREW M8 x 16	4	8.8	984 40908-11
11	SCREW M5 x 8	2	12.9	984 40905-03
14	SET SCREW M10 x 20	4	8.8	984 40910-03
17	SEAL RING	1	RG 5	984 10252-06
18	PLUG 1/8" BSP	2	BRASS	984 40941-15
19	KEY 4 x 4 x 15	1	AISI 316	984 10230-07
20	SCREW M5 x 16	1	AISI 316	984 40905-04
22	MECHANICAL SEAL 16 MM	1	316 C/CE	984 10230-08
23	WASHER	1	AISI 316	984 10230-09

Only to the extent expressly agreed by us this document may constitute a contractual obligation on our part.

This document and its contents are our exclusive property and must not be copied, reproduced, transmitted or communicated to any other party or used for purposes not expressly permitted by us.

Sheets	Rev. no.	Revision	Date	Revised	Reviewed	Approved

Article no.

Title: ASSEMBLY DRAWING FRESHWATER PUMP

Alfa Laval

Alfa Laval Desalt A/S

COPENHAGEN DENMARK

Date	Drawn	Reviewed	Approved
17.03.95	CSM	HJO	HJO

ISO method E | Scale | Weight | CAD | Basic drawing no. rev.

Repl. for rev.

Drawing No. 985 16684

Repl. by rev.

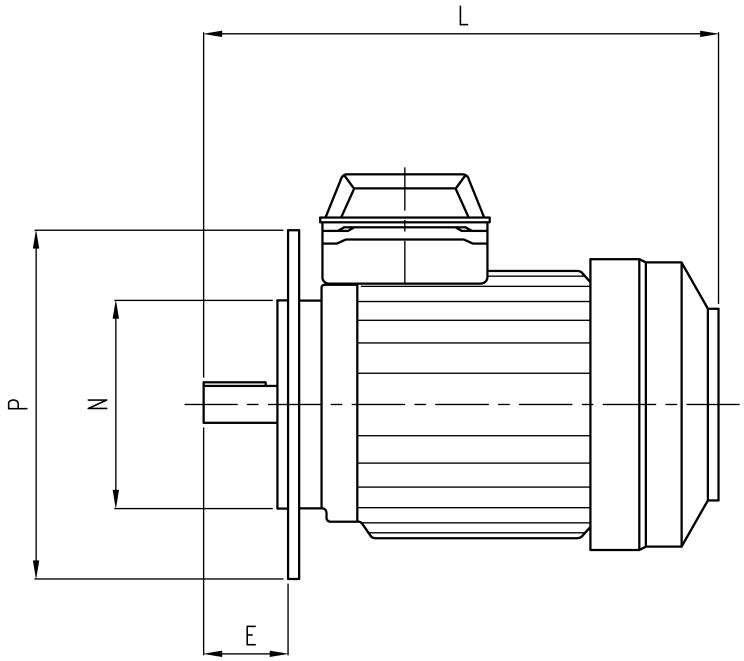

SHAFT EXTENSION

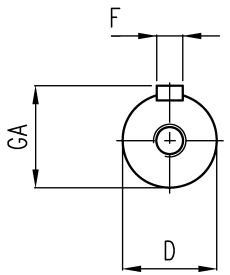

USE: FRESH WATER PUMP

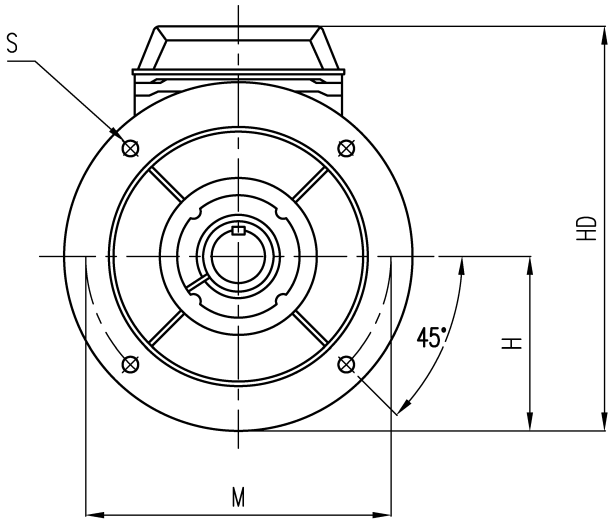

TYPE	OUTPUT (kW)	SPEED (RPM)	VOLTAGE (V)	FREQENCY (Hz)	CURRENT (A)	PROTECTION	COOLING	INSULATION CLASS	WEIGHT (KG)	BEARING D-END	BEARING N-END	CABLE GLANDS
71 B-2	0,75	3360	440	60	1,43	IP 65	IEC 34-6	F	6,5	984 20645-00 6203-2Z C3	984 20645-00 6203-2Z C3	ø10,5 - 12

FLANGE-MOUNTED MOTOR IM 3001, B5										
D	GA	F	E	L	M	N	P	S	HD	H
14	16	5	30	241	130	110	160	10	185	80

THREE PHASE INDUCTION MOTOR FOR MARINE ENVIRONMENT
TOTALLY ENCLOSED FAN COOLED SPLASH PROOF

Rev. No.	Revision text	Date	Drawn	Checked	Appr.
04	New drawing head	141205	PLD	PLD	JBN

Title: OUTLINE DRAWING FOR MOTOR 71 B-2

Proj. No	Proj. Type	Proj. Name

Dimensions Without Tolerances: ISO 2768-M or ISO 13920-B			Size: A3
Date: 14.12.2005	Drawn: PLD	ISO Method E	Scale: 1:1
Checked: PLD	Approved: JBN		Sheet

Location: Alfa Laval Copenhagen A/S - Denmark

Drawing No: 985 16704 Rev.: 04

Only to the extent expressly agreed by us this document may constitute a contractual obligation on our part.

This document and its contents are our exclusive property and must not be copied, reproduced, transmitted or communicated to any other party or used for purposes not expressly permitted by us.

O:\PT\Desal Share\Technic\TEGNING\TIL Q Drev\PLD Udkast\Motor outline drawings\L6704-R04.dwg

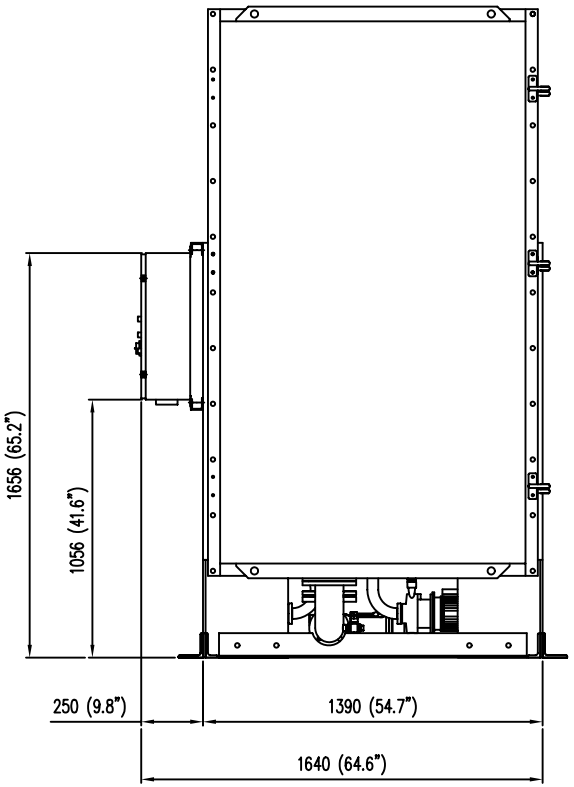

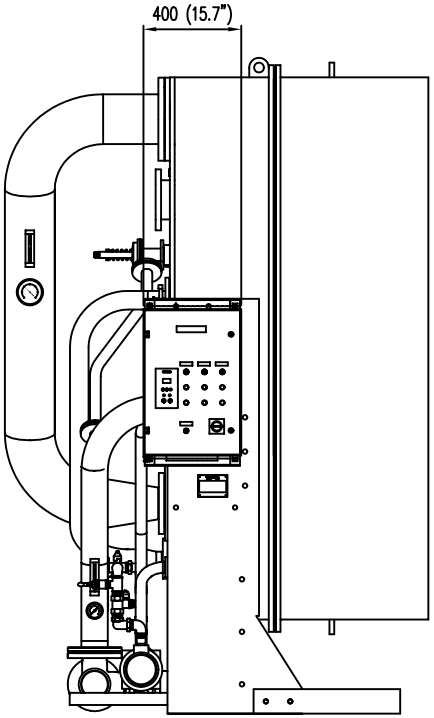

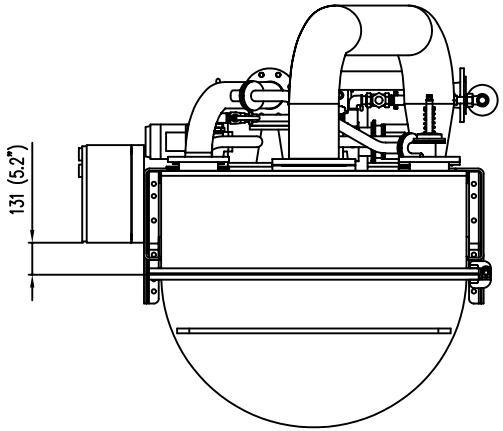

Panel is internally connected.
Needs only to be connected to
main power and ejector pump.

Frame for panel:
Material: Steel (Hot dip galvanized)

Note: Cable tray for yard cables to be fitted under control panel.

Title: Control panel buil-on D-PU-2-36-C(AS)100/125			
Location: Alfa Laval Copenhagen A/S – Denmark		MDPC No. 9.2.9.1-3	
Edition: 06.09.2005	Drawn: MFN	Drawing No. 985 17550	Rev. 02

Illustrations, indications of materials, dimensions and weights etc. herein, do not constitute any commitment on our part. We reserve the right to change such specifications when necessary.

Only to the extent expressly agreed by us this document may constitute a contractual obligation on our part.

This document and its contents are our exclusive property and must not be copied, reproduced, transmitted or communicated to any other party or used for purposes not expressly permitted by us.

9.2.6.1-4 Technical data, Control panel for Freshwater Generator

General

Control panel for single- and two-stage freshwater generators. Include start/stop of pumps and salinity supervision. The panel is internally connected, and needs only to be connected to main power and to the electrical components on the freshwater generator.

Standard Design

Standard design consists of a box with the following components built in:

Main switch (locks panel if power is on)
Push button for freshwater, ejector and ejector pump
- Start (green)
- Stop (red)

Signal lamp for freshwater and ejector pump running (green)
Signal lamp for source on (white)

Thermal rely and contractor for:
- Freshwater pump(s)
- Ejector pump

Operating transformer
Salinometer
Fuses
Nameplate (inside panel)
Painting: Munsell 7.5 BG 7/2

Electrical Design

Supply voltage:
3 x 440 V 60 Hz

Control voltage:
220 V

Permissible tolerances:
Voltage: +10/-15%
Frequency: ± 2%

Internal wire:
Class 70°C

External connections:
Remote alarm, thermal overload freshwater pump – NO
Remote alarm, thermal overload ejector pump – NO
Remote start/stop freshwater pump

Illustrations, indications of material, dimensions and weights etc. herein, do not constitute any commitment on our part. We reserve the right to change such specification when necessary.

Remote start/stop ejector pump
Contact set, freshwater pump running - NC

Contact set, freshwater pump running – NO
Contact set, ejector pump running – NC
Contact set, ejector pump running – NO

External connections (salinometer):
External meter
Electrode unit
External alarm contact – NC
External alarm contact – NO
Buzzer
Solenoid valve – NC
Solenoid valve – NO

Other Data

Protection degree:	IP 44
Max. ambient temperature:	50°C
Dimensions:	400 x 600 x 200 mm
Weight:	approx. 27 kg

Options (Supplied by Alfa Laval)

- Ammeter for ejector pump
- Running hour meter for ejector pump
- Mini circuit breaker to protect freshwater pump
- Relay for thermal overload - NC

Illustrations, indications of material, dimensions and weights etc. herein, do not constitute any commitment on our part. We reserve the right to change such specification when necessary.

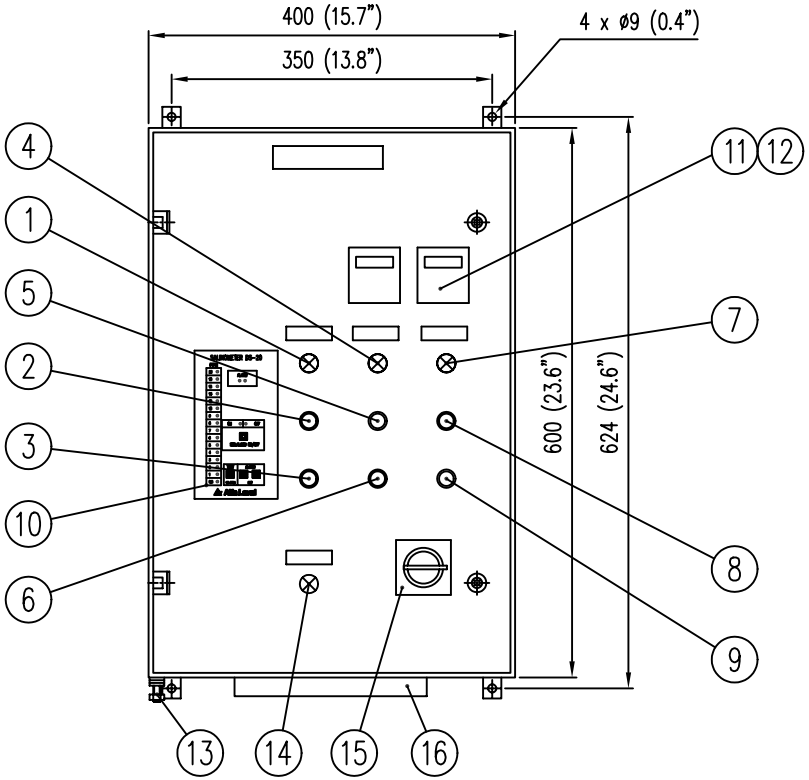

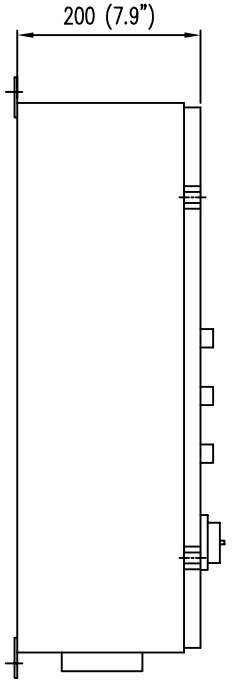

Legend

1 Running light, ejector pump
2 Start, ejector pump
3 Stop, ejector pump
4 Running light, freshwater pump 1
5 Start, freshwater pump 1
6 Stop, freshwater pump 1
7 Running light, freshwater pump 2
8 Start, freshwater pump 2
9 Stop, freshwater pump 2
10 Salinometer
11 Running hour meter, freshwater pump 1
12 Running hour meter, freshwater pump 2
13 Earth connection point
14 Source on
15 Main switch
16 Connections: 1 PG29 (20–27 mm)
2 PG21 (14–20 mm)
2 PG16 (8–15 mm)
2 PG13,5 (7–13 mm)
Additional 6 PG16

* SHI H.1657/87

Title: Dimensional drawing. Control panel for Two-stage FWG (option A)			
Location : Alfa Laval Copenhagen A/S – Denmark		MDPC No. 9.2.6.2–5.1	
Edition : 30.12.2004	Drawn : MFN	Drawing No. 985 17585	Rev. 02

Illustrations, indications of material, dimensions and weights etc. herein, do not constitute any commitment on our part. We reserve the right to change such specifications when necessary.

Only to the extent expressly agreed by us this document may constitute a contractual obligation on our part.

This document and its contents are our exclusive property and must not be copied, reproduced, transmitted or communicated to any other party or used for purposes not expressly permitted by us.

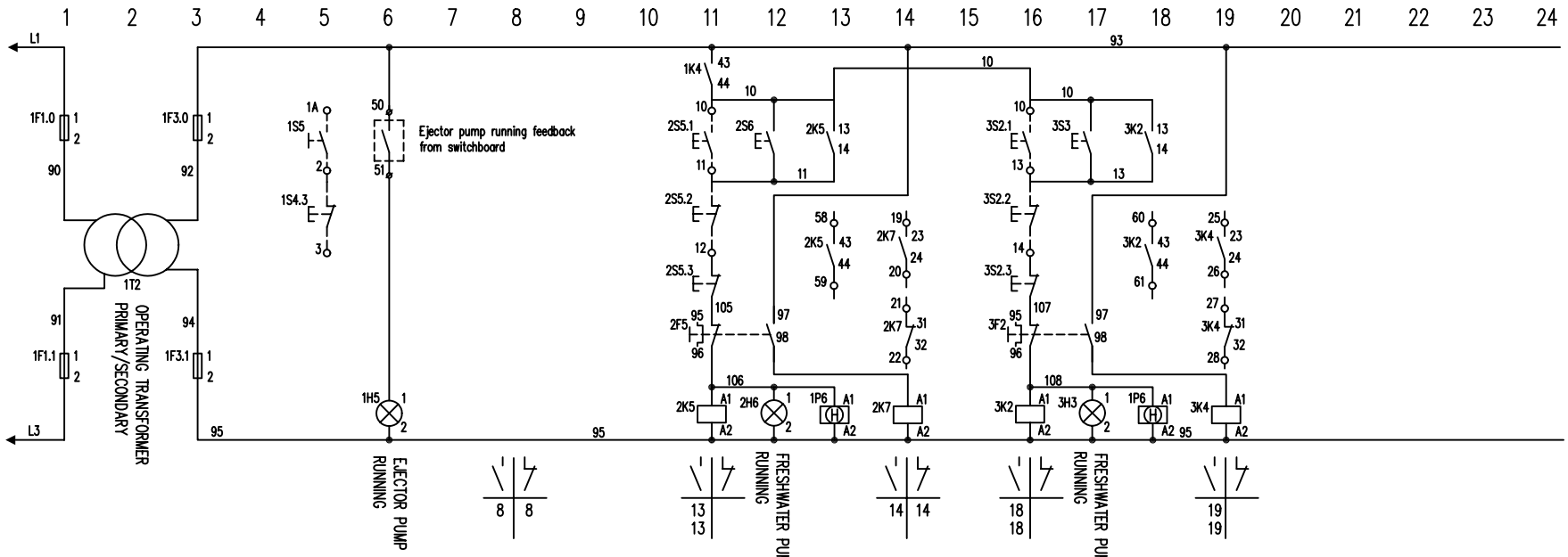

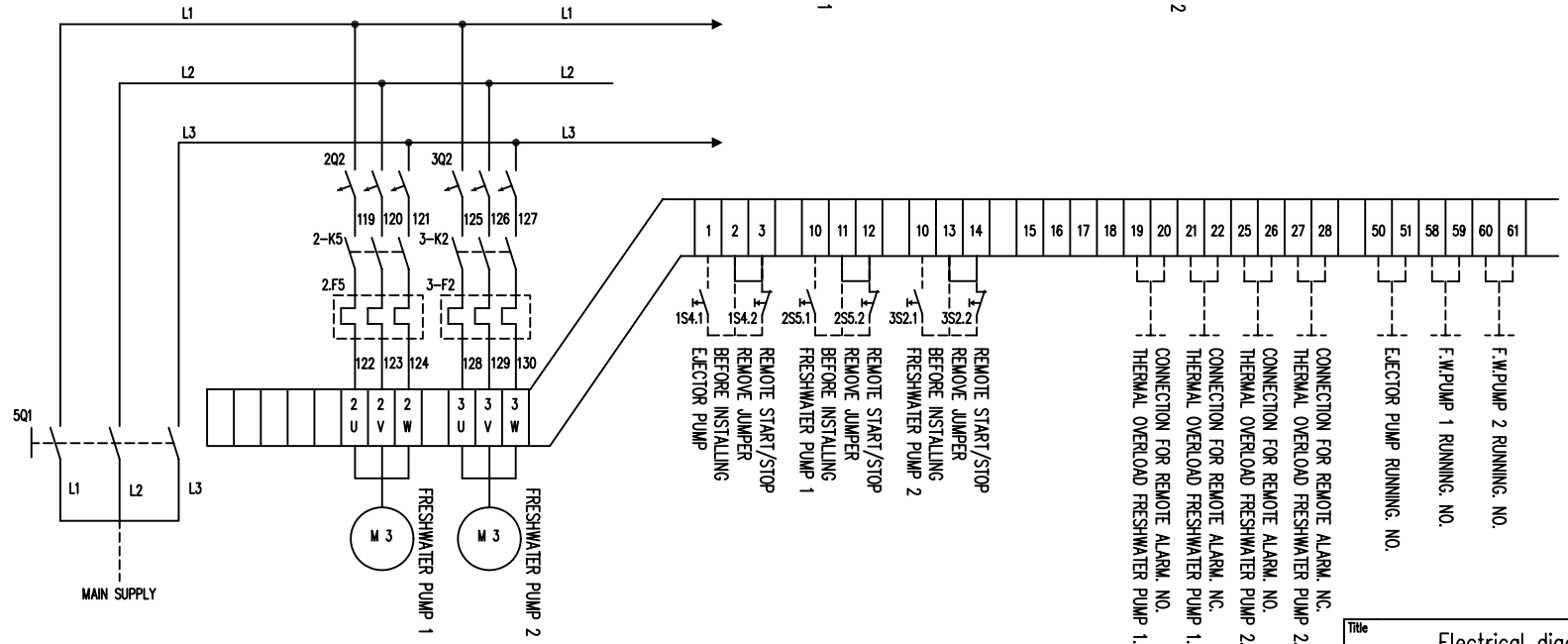

Page 1 of 2

Title: Electrical diagram Manual starters and salinometer for FWG		
Location : Alfa Laval Copenhagen A/S – Denmark		MDPC No. 9.2.6.3–5.1
Edition : 04–04–06	Drawn : MFN	Drawing No. 985 17604 / Rev. 02

Illustrations, indications of material, dimensions and weights etc. herein, do not constitute any commitment on our part. We reserve the right to make changes such specifications when necessary.

Only to the extent expressly agreed by us this document may constitute a contractual obligation on our part.

This document and its contents are our exclusive property and must not be copied, reproduced, transmitted or communicated to any other party or used for purposes not expressly permitted by us.

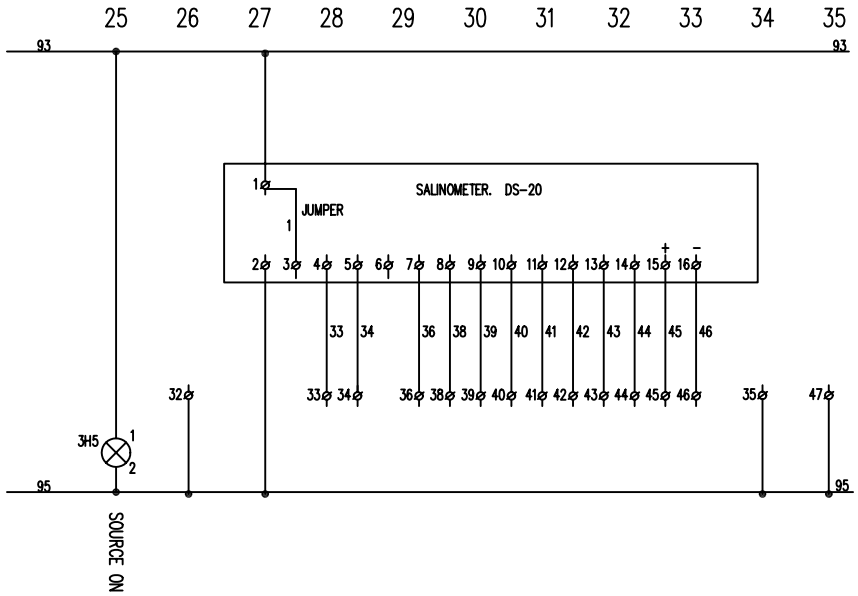

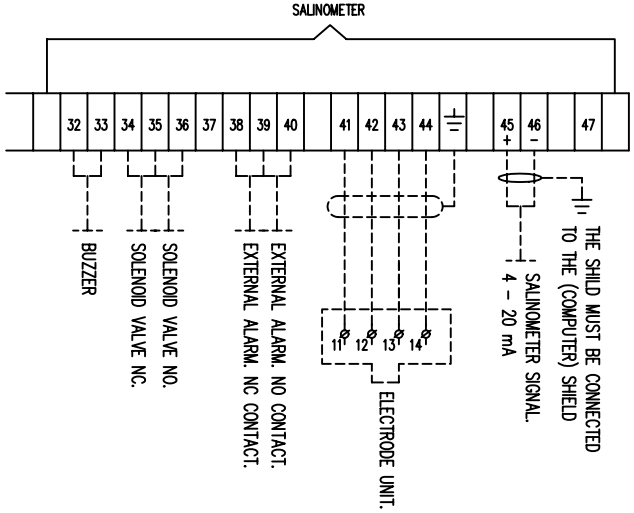

Illustrations, indications of material, dimensions and weights etc. herein, do not constitute any commitment on our part. We reserve the right to change such specifications when necessary.

Only to the extent expressly agreed by us this document may constitute a contractual obligation on our part.

This document and its contents are our exclusive property and must not be copied, reproduced, transmitted or communicated to any other party or used for purposes not expressly permitted by us.

Title: Electrical diagram Control panel for Two-stage FWG (option A)			
Location : Alfa Laval Copenhagen A/S – Denmark		MDPC No. 9.2.6.3-5.1	
Edition : 04-04-06	Drawn : MFN	Drawing No. 985 17604	Rev. 02

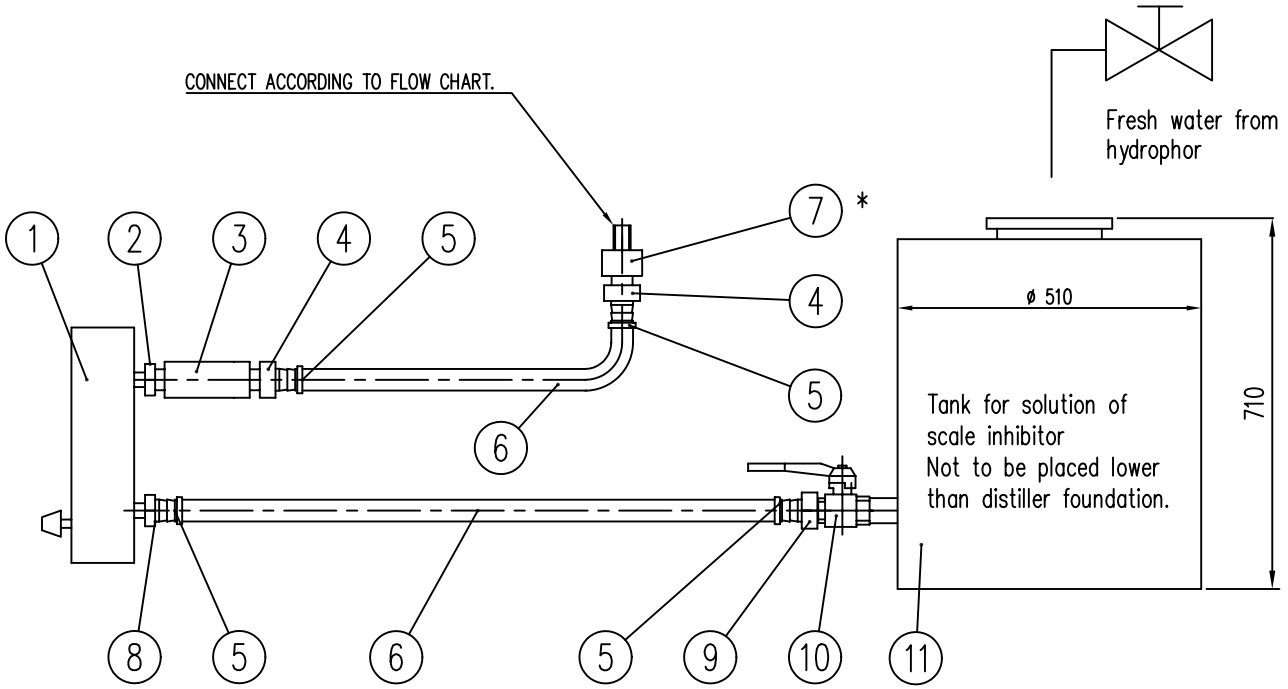

Recommendation

Use fully soluble scale inhibitor for instance on polymere basis.
Mix quantity required for 24 hours operation in tank according to maker's instruction and adjust dosage to cover max. freshwater output from distiller.
Flush regularly.

1 Flowmeter incl. reg. valve
2 Nipple 3/8" x 1/8"
3 Non return valve 3/8"
4 Hose connection 3/8" x 10
5 Hose clip
6 Hose 3/8" (4000 mm)
7 Connection 3/8" x 1/4" *
8 Connection 1/8" x 10
9 Connection 1/2" x 10
10 Ball Valve 1/2"
11 PE tank (130 l)

Title: Feed Ware treatment – 130 liter			
Location: Alfa Laval Copenhagen A/S – Denmark		MDPC No. 9.2.9.3–2	
Edition: 22.03.2005	Drawn: MFN	Drawing No. 985 17586	Rev. 02

Illustrations, indications of material, dimensions and weights etc. herein, do not constitute any commitment on our part. We reserve the right to change such specifications when necessary.

Only to the extent expressly agreed by us this document may constitute a contractual obligation on our part.

This document and its contents are our exclusive property and must not be copied, reproduced, transmitted or communicated to any other party or used for purposes not expressly permitted by us.

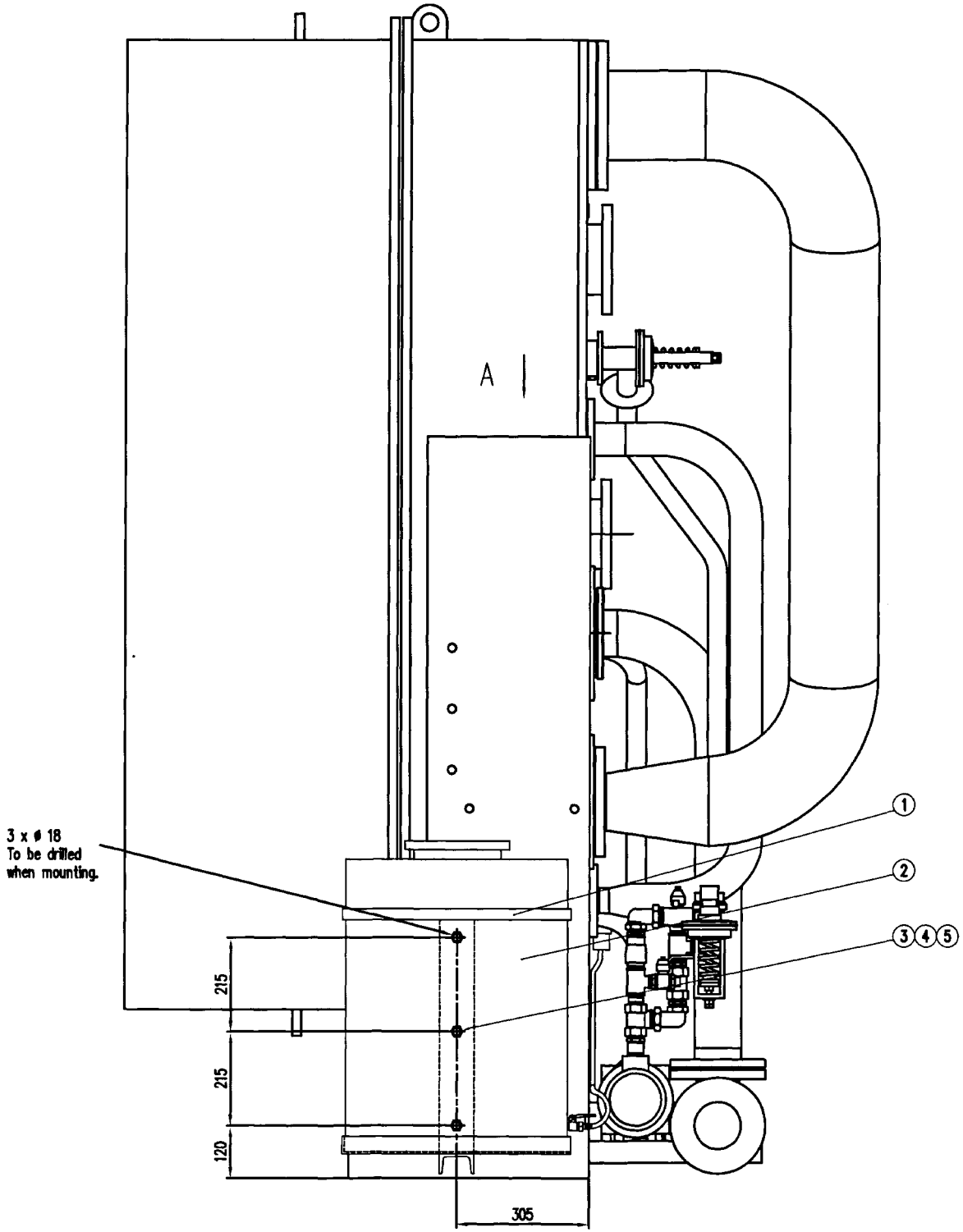

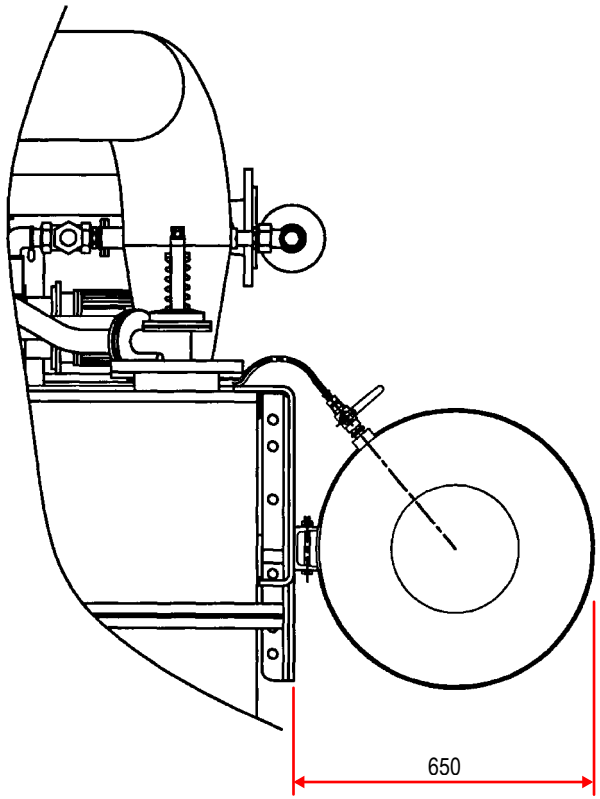

985 20131-80	2	Alfa Laval Alfa Laval Copenhagen A/S DENMARK		FEEDWATER TREATMENT MOUNTING AT RIGHT SIDE	
		Dimensions without tolerances: DS/ISO 2768-M or ISO 13920-B	Scale 1:5	Project name	
			Format A1	Project type D-PU-2-38-C	Project no.
		Date 20.06.02	Drawn BGU	Drawing No. 985 20131	Rev. 00

Equipment specification
Freshwater generator D-PU-36-CAS125

List of loose supply items

No.	Description	Drawing No.	Article No.	Set(s)/Unit	Remark
1	Thermometer	984 20577	985 00080-99	1	S.W In L=100mm

DEPT	DATE	DRAWN	CHECKED	APPROVED	DOCUMENT NO.
Market support	991102	SSK	BCI	YHM	LOOSE.XLS

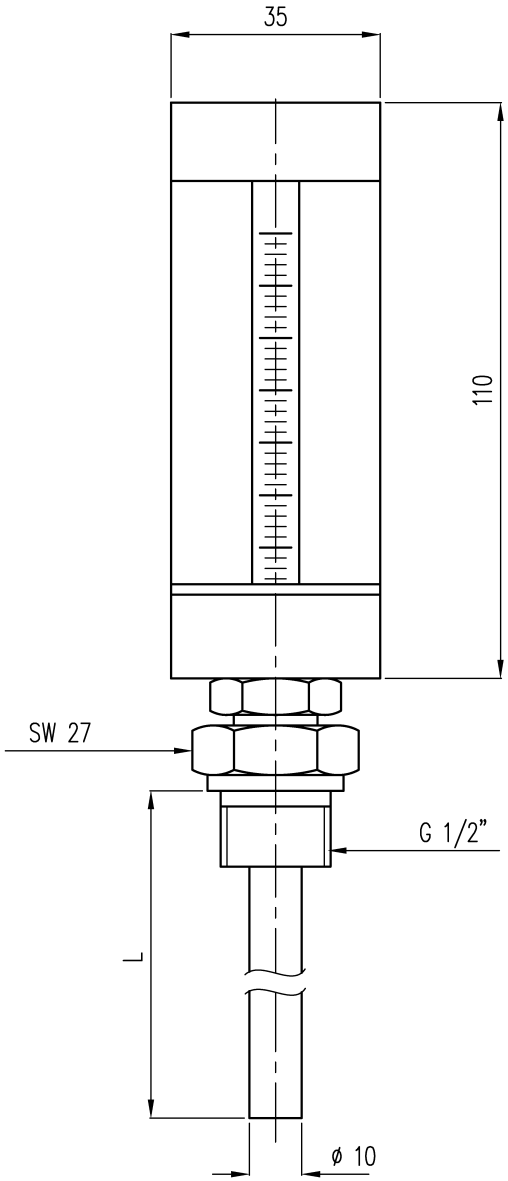

L (mm)	Pocket material	Art. no.
63	CuNi10Fe	984 30365-00
100	CuNi10Fe	985 00081-05
160	CuNi10Fe	985 00081-06
63	AISI316	985 00080-98
100	AISI316	985 00080-99
160	AISI316	985 00081-00

Scale:
0 – 100° C
32 – 212° F

*For S.W line inlet - 1 EA

Rev. No.	Revision text	Date	Drawn	Checked	Appr.

Title: THERMOMETER STRAIGTH WITH POCKET

Proj. No	Proj. Type	Proj. Name

Dimensions Without Tolerances: ISO 2768-M or ISO 13920-B			Size: A3	Location: Alfa Laval Copenhagen A/S – Denmark
Date: 02.12.2005	Drawn: PLD	ISO Method E	Scale: 1:1	Drawing No: 985 20577 Rev.: 00
Checked: JBN	Approved: JBN		Sheet:	

Only to the extent expressly agreed by us this document may constitute a contractual obligation on our part.

This document and its contents are our exclusive property and must not be copied, reproduced, transmitted or communicated to any other party or used for purposes not expressly permitted by us.

O:\PT\Desal Share\Technic\TEGNING\TIL Q Drev\PLD Udkast\20577-R00.dwg

General.

Spare part box storing spare part and tools of machinery on ships.
Made of steel and hinged in one side.
Provided with a chain with hook and a lock with two keys.
Made in accordance with Japanese standard JIS F 0902–1978.

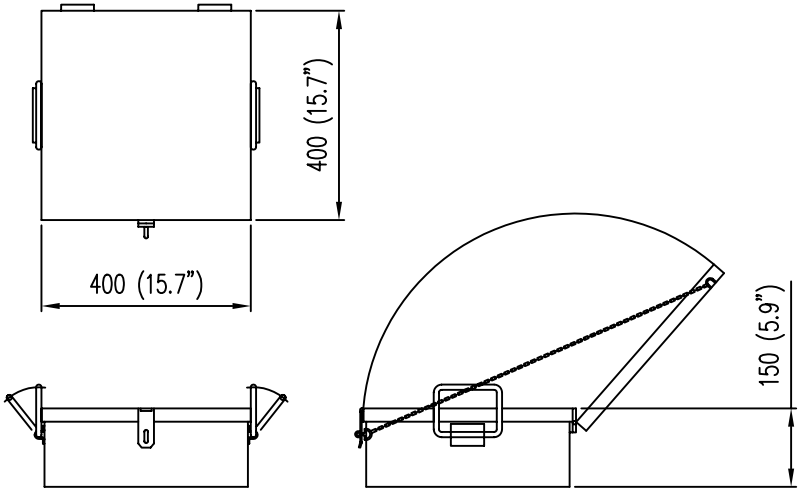

Materials.

Box:	Steel (painted)
Painting:	Munsell 7.5 BG 7/2

Title: Steel box for spare part kits			
Location: Alfa Laval Copenhagen A/S – Denmark		MDPC No. 9.2.9.2–3	
Edition: 22.03.2005	Drawn: MFN	Drawing No. 985 17526	Rev. 01

Illustrations, indications of materials, dimensions and weights etc. herein, do not constitute any commitment on our part. We reserve the right to change such specifications when necessary.

Only to the extent expressly agreed by us this document may constitute a contractual obligation on our part.

This document and its contents are our exclusive property and must not be copied, reproduced, transmitted or communicated to any other party or used for purposes not expressly permitted by us.

NO.		1	2	3	4	5	6
NAME		MECH. SEAL 16 MM	MECH. SEAL 35 MM	BALL BEARING FOR MOTOR	BALL BEARING FOR MOTOR	GASKET FOR FRONT COVER	GLUE
SKETCH		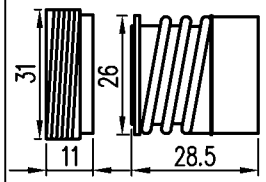	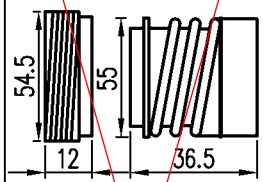	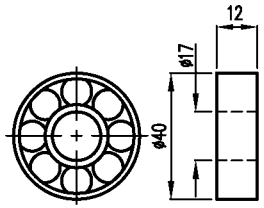	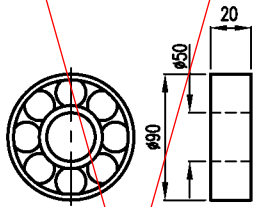	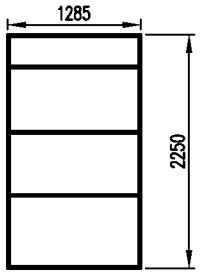	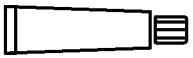
MATERIAL		CARBON CERAMIC	CARBON CERAMIC	NO. 6203- 2Z/C3	NO. 6210- Z/C3	NITRILE RUBBER	
WEIGHT (kg)		0,1	0,1	0,05	0,41	2,5	0,4
SUPPLY PER SHIP	WORKING	1	1	2	2	1	
	SPARE	1	1	1	1	1	
DRAWING	NO.						
	PART NO.	984 10230-08	984 10724-11	984 20645-00	985 00037-49	985 19958-01	984 40002-00
REMARKS				FOR STANDARD MOTOR	FOR STANDARD MOTOR		FOR GASKETS

PAGE	
SHIP NO.	
BOX NO.	

DPU-36-2-C100/125

Rev. No.	Revision text	Date	Drawn	Checked	Appr.

Title: STANDARD SPARES FOR FWG DPU-2-36

Proj. No	Proj. Type	Proj. Name

Dimensions Without Tolerances: ISO 2768-M or ISO 13920-B			Size: A3
Date: 12.01.2006	Drawn: PLD	ISO Method E	Scale: 1:1
Checked: PLD	Approved: JBN		Sheet:

Location: Alfa Laval Copenhagen A/S – Denmark

Drawing No: 985 20599 Rev.: 00

Only to the extent expressly agreed by us this document may constitute a contractual obligation on our part.

This document and its contents are our exclusive property and must not be copied, reproduced, transmitted or communicated to any other party or used for purposes not expressly permitted by us.

O:\PT\Desal Share\Technic\TEGNING\TIL Q Drev\PLD Udkast\Spareparts\20599-R00.dwg